VRX Racing

MIZAR

INSTRUCTION BOOK AND COMPONENT LISTING



Mizar

- RH1071 BRUSHED ■
- RH1072 BRUSHLESS ■

Megrez

- RH1073 BRUSHED ■
- RH1074 BRUSHLESS ■

MEGREZ

DOMINANT DRIVE

SPEED DEMON

1:10 SCALE

ELECTRIC

FOUR-WHEEL DRIVE

2.4G HZ 2.4Hz RADIO

THE MAXIMUM ANGLE IS 60°

congratulations on your purchase of the VRX Racing 1/10 4WD electric cars
This 1/10th scale model has been factory assembled and all electrics installed and set up to make it the easiest possible.introduction to the sport of driving RC cars.

WARNNING:Read the ENTIRE instruction manual to become familiar with the features of the product before operating Failure to operate the product correctly can result in damage to the product.personal property and serious injury.This is not a toy and must be operated with caution and common sense. Failure to operate this product in a safe and responsible manner could result in damage,injury or damage to other property.This product is not intended for use by children without direct adult supervision.It is essential to read and follow all the instructions and warnings in the manual,prior to assembly,set-up or use ,in order to operate correctly and avoid damage and serious injury

Safety Precautions and Warnings
You are responsible for operating this model such that it does not endanger yourself and others,or result in damage to the product or the property of others.This model is controlled by a radio which is possibly subject to interference which can cause momentary loss of control so it is advisable to always keep a safe distance to avoid collisions and injury.Age Recommendation:14years or over.This is not a toy.This product is not intended for use by children without direct adult supervision.

Carefully follow these directions and warnings,plus those any additional equipment associated with the use of this model,chargers,ESC and motors,radio etc.

- Never operate your model with low transmitter batteries.
- Always operate your model in an open area away from cars,traffic or people
- Never operate the model in the street or in populated areas.
- Always keep the vehicles in direct line of sight,you cannot control what you cannot see!
- Keep all chemicals,small parts and anything electrical out of the reach of the children.
- Avoid water exposure,moisture causes damage to electronics and may result in the loss of control or permanent damage.
- Avoid injury from high speed rotating parts,gears and axles etc.
- Novices should seek advice from more experienced people to operate the model correctly and meets its performance potential.
- Exercise caution when using tools and sharp instruments.
- Do not put fingers or any objects inside rotating or moving parts.
- Take care when carrying out repairs or maintenance as some parts may be sharp.
- Do Not touch equipment such as motor electronic speed control and battery,immediately after using your model because they can generate high temperatures.
- Always turn on your transmitter before you turn on the receiver in the car Always turn off the receiver before turming your transmittler off.
- Keep the wheels of the model off the ground,keep your hands away from the wheels when checking the operation of the radio equipment.
- Prolong motor life by preventing overheat conditions.Undue motor wear can result from frequent turns,rapid change of direction forwards/backwards,continuous stop/starts,pushing/pulling objects, driving in deep sand and tall grass,or driving continuously up hill.

Required equipment for operation

1.Tools required for building and maintenance:

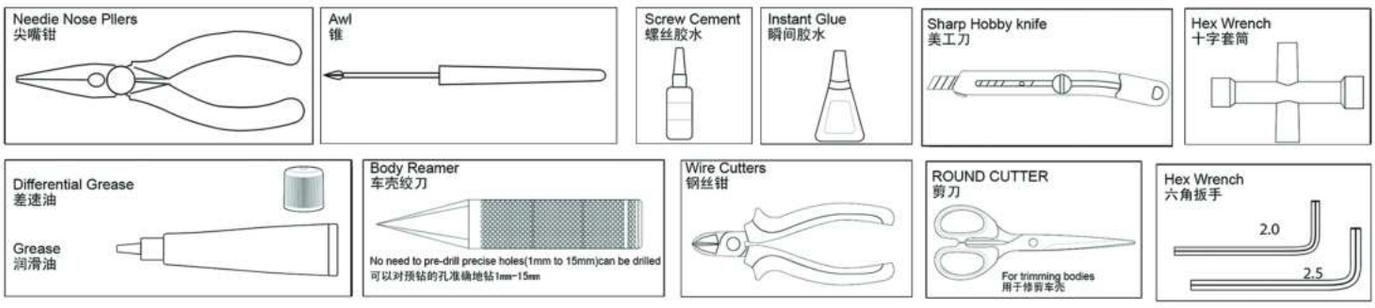

WARNING!

Do not use a power screw driver to install screws into nylon or plastic materials.The fast locking may heat up the screws being installed that may break the molded parts or strip the threads during installation.

2.Additional items needed for operation:

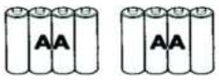

AA Alkaline batteries for transmitter

IMPORTANT!

Check that all screws and nuts are tight before each use.

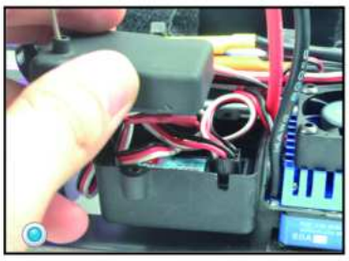
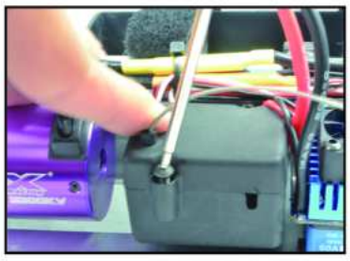

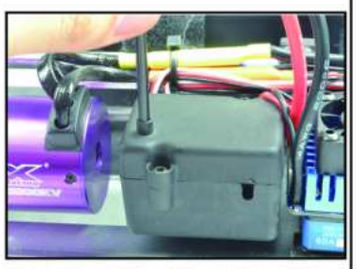

EBL VERSION

Charging/installing the Battery.

Always store your model with the battery pack unplugged and removed.Always charge your battery away from the vehicle.

WARNING! NEVER LEAVE THE BATTERY UNATTENDED WHILE ON CHARGE

The supplied charger can charge either 2s or 3s (cell number)Lipo batteries.The supplied battery is a 2s ensure you plug it into the correct 2s balance port.When the charger is connected to the mains powers the power LED will turn green. Once your connect your balance connector to the charge the status LED will turn red indicating that charging is in progress.Once the battery is fully charged the status LED will turn green. If you experience the LED binking red then there is an error with either the battery or charger.



when charging a completely discharged battery,the charger can become hot to touch.NEVER LEAVE THE BATTERY CHARGE UNATTENDED.Always disconnect the charger from the mains supply and the battery pack when not in use.



To install a charged battery,firstly remove the body shell and insert the battery into the battery case, then fasten the two Velcro straps to fix the battery stably.When connecting battery and turning caron,ensure it is off ground with wheels away from objects.

EBD VERSION

Charging/installing the Battery.

Always store your model with the battery pack unplugged and removed. Always charge your battery away from the vehicle.The included 500mAh mains charger will take approx 4 hours to charge a fully charger if it becomes warm to the mains supply and the battery pack when not in use.keep children away from charger and battery during the charging process.

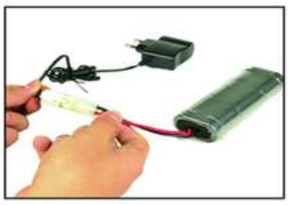



To install a charged battery,firstly remove the body shell and insert the battery into the battery case,then fasten the two Velcro straps to fix the battery stably. When connecting battery and turning car on,ensure it is off ground with wheels away from objects.

Notes on Battery use:

Always allow the battery cool after use,before recharging.
Always inspect the battery before charging.
Any bare wires,split heat shrink or leakage is a sure sign of abuse.
Never attempt to charge dead or damaged batteries.
Do not disassemble the battery or cut the connector wires.
If the battery connector,battery case or cable insulation get hot enough to melt or split there is most likely a serious problem with your model,battery wires or speed controller,Find and correct the problem before installing another charged battery pack.
NEVER charge the battery unattended incase of overcharging,you need to able to monitor the battery during charging.
Charge away from flammable objects and on a non-flammable surface incase the battery becomes too hot.

Getting Started

Refer to 2.4ghz binding manual for radio set-up.
Switch on transmitter
Hold vehicle clear of the ground,connect battery pack and switch on receiver.
Test the transmitter to check control of the vehicle with wheels off the ground.
Start driving slowly and if the vehicle of the vehicle with wheels off the ground.
For the very first run use the throttle gently,to help the driver become accustomed to the vehicles behaviour and controls.
Although this vehicle features waterproof electronics they are not designed to be submerged in water. Potential damage can still occur to vehicles components if you do so.

After Run.

Switch off the receiver power,switch off the transmitter.Disconnect the battery and remove it from the vehicle,allow it to cool before recharging.If you have a second charged battery all ready to use ,still allow the vehicle to cool slightly before continuing.

Regular maintenance.
Frequently check the whole vehicle for loose or missing fixings.Use thread lock on any replacement screws into metal threads.

Frequently check rotating parts are free from grass,string etc. that might bind their motion and over stress themotor or speed controller.Remove the wheels occasionally and checkbehind the mounting hex for obstructions oranything that might have been wrapped around the axleand caused extra drag.

Check the gear mesh frequently and remove any stones or from gear teeth to prevent premature wear and damage.If the motor moves,or is removed for maintenance/exchange, the gear mesh will need to be set.Simplyslacken the motor retaining screws and adjust the motor untill there is just discemable backlash between pinion and spur teeth.If the gear is too tight or too loose the gears will be noisy and could be damaged.

Shock absorbers will wear prematurely if used in dirty dusty conditions.
Replace oil and seals as required to keep a smooth dampening action.

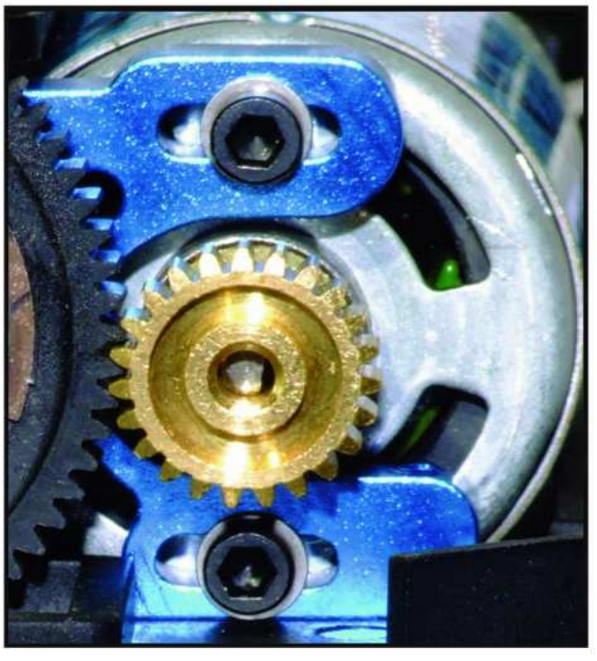

Trouble shooting guide.

Short Runtime: Battery damaged/not Charged. Motor dirty or brushes worn. Drivetrain binding.	Sluggish Action: Motor damaged. Bind in drive train. Battery running low on power.	Motor/ESC overheat: Over-geared Binding transmission. Seized axle bearing. Motor binding	Motor spins but vehicle refuses to move: Gears damaged. Gears loose on shaft. Magnets debonded from motor armature. Slipper clutch too loose. Drive shaft broken or missing.	Poor Range or fails to operate: Transmitter batteries low. Vehicle Battery Low. Transmitter switched off. Transmitter/receiver aerial not extended. ESC switched off or battery not connected. Loose connectors/wires. 2.4ghz binding with-receiver lost

LIPO BATTERY-USER SAFETY AND HANDLING INSTRUCTIONS.

Read all safety instructions before charging or using your batteries for the first time.
Lipo batteries require completely different charging and care than Nicd and NIMH batteries.Misuse can result in fire,personalinjury and/or damage to property.The buyer assumes all Liability and risk associated with the use of Lithium-Polymer(Li-Po)batteries.Immediately retum the battery,unused,if you do not agree with these terms.

General guidelines and warnings:

1.Use a Lithium Polymer specific chargers only! Do not use a Nicd or NiMH charger.
2.NEVER charge unattended.Always charge in safety sack or metal tin with lid away from other flammable materials.
3.During the charge process watch for swollen or ballooning cells.If this happens immediately disconnect the charger and move the battery to a fire proof place for 15 minutes. Do not attempt to charge again.
4.A short circuit can cause a rapid discharge of high currents.Avoid short circuits,and be aware of short circuits on jewelery.
5.Any Lithium Polymer battery involved in a crash should be removed and observed in a fireproof space for 15 minutes before continuing to use or charge the battery.
6.If rewiring the battery pack,rewire the leads one at a time. Do not cut both leads.Do not short circuit on tools.
7.Do not expose battery packs to direct sunlight for extended periods.
8.Do not attempt to tamper with or open the Lipo Hardcase.The case is protection against possible battery swelling
Before charging:
Visually inspect the pack checking for damaged leads,connectors,cracked heat shrink covering, swelling or other abnormalities.Do not charge if the pack is damaged.

Charging process:

1.NEVER charge unattended.
2.Charge away from flammable materials and inside a Lipo safe sack or metal tin with lid.
3.Allow battery to cool before charging.
4.Use the battery label for setting charger call count and voltage.
5.Do not exceed 5C MAX charge rate.(Example,charge a 1000mAH pack at 5A MAX) If disposing of a Lipo battery proceed as follows:
Submerse the battery into a container filled with about 10 litres of salt water (one cup of salt in 10L). Leave the battery submerged for 2 weeks,this will slowly and safely discharge the battery until the voltage has dropped to zero volts which eliminates the risk of any chemical reaction.It can then be disposed off in the general waste collection.

Front Shocks(Bag A)
前避震器

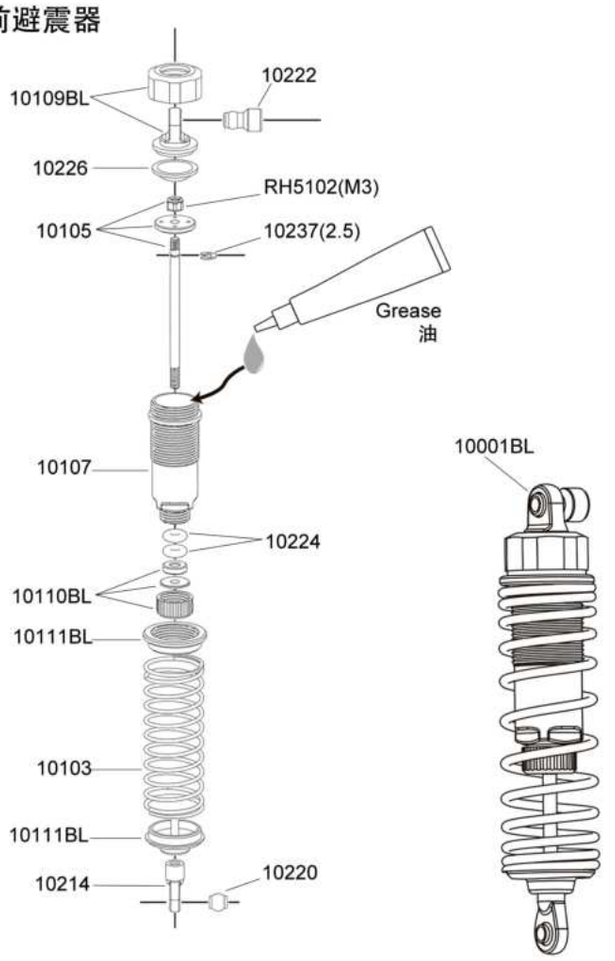

Rear Shocks(Bag B)
后避震器

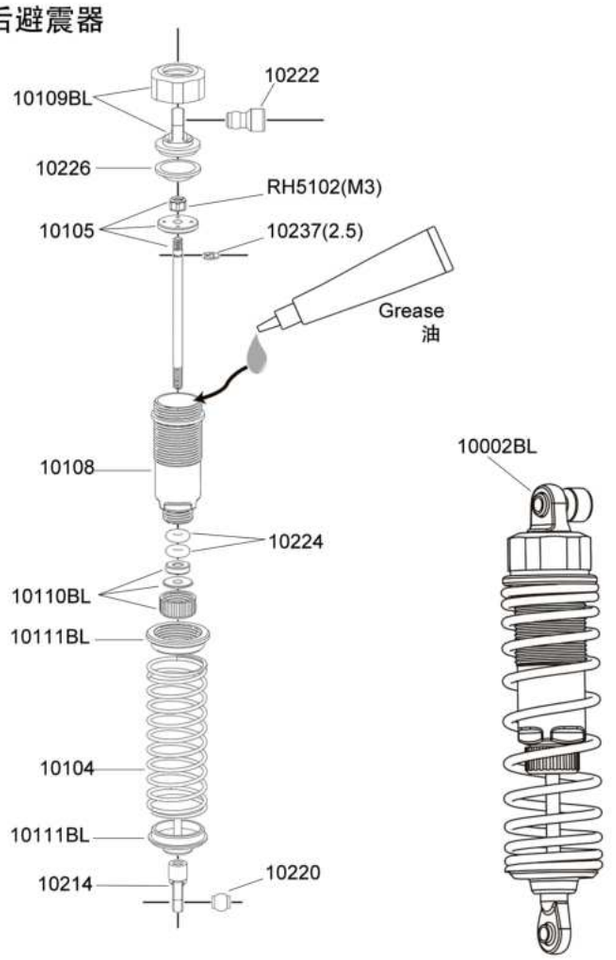

Front/Rear Differential(Bag C)
差速器 10003

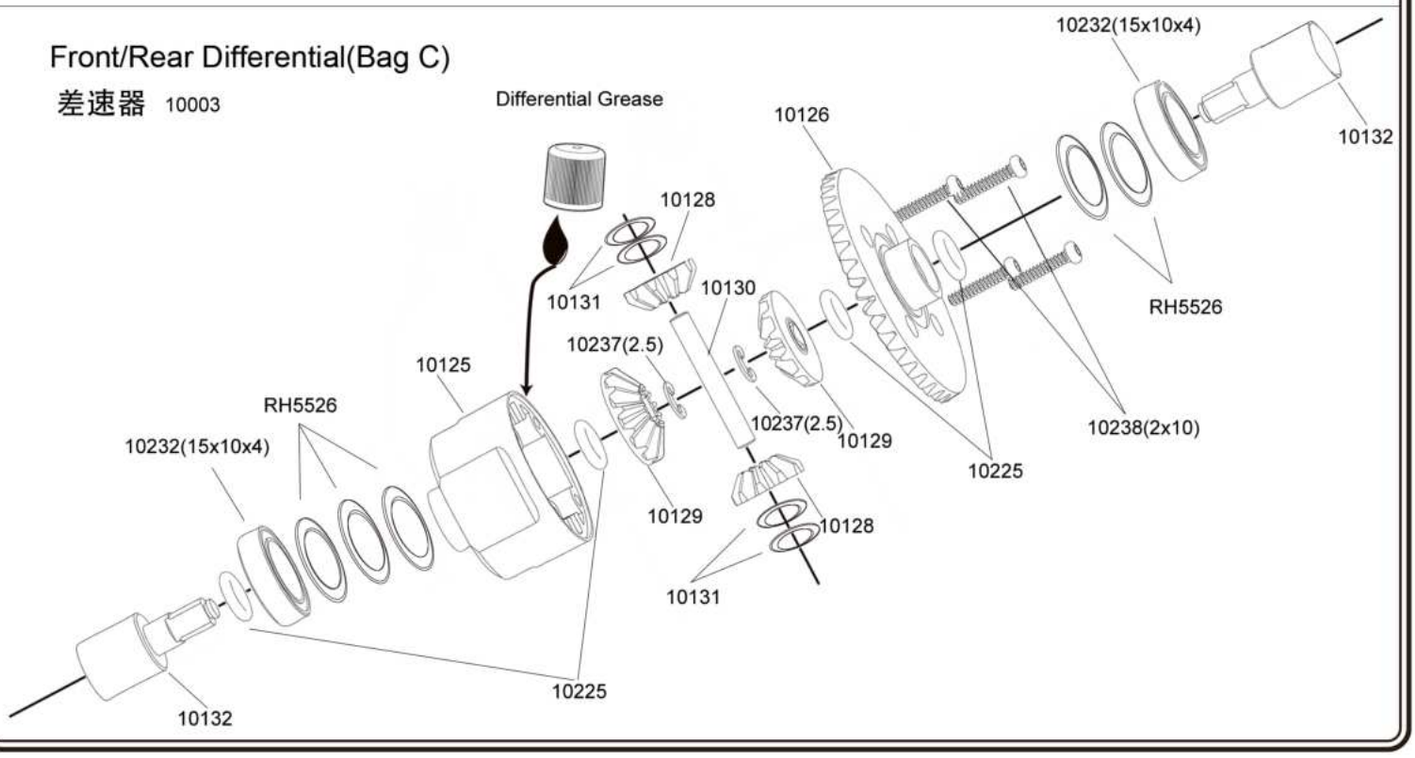

拉杆组

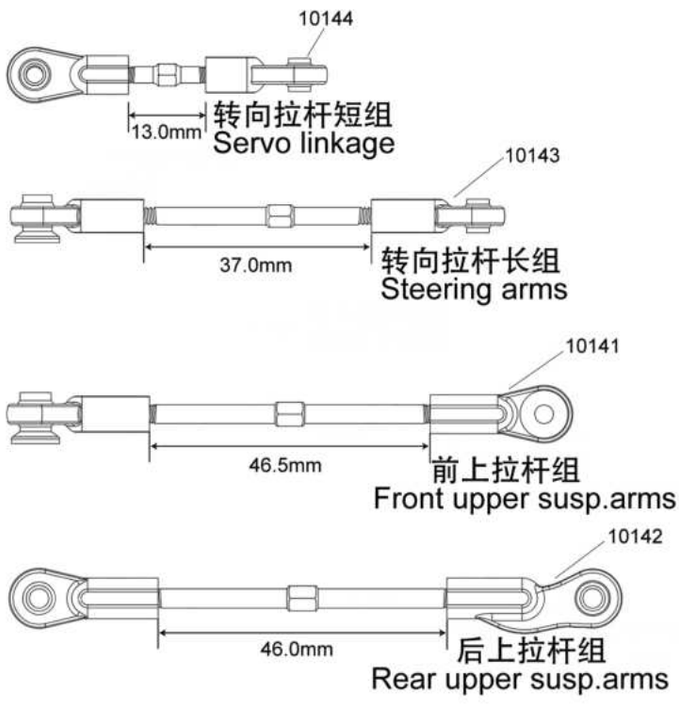

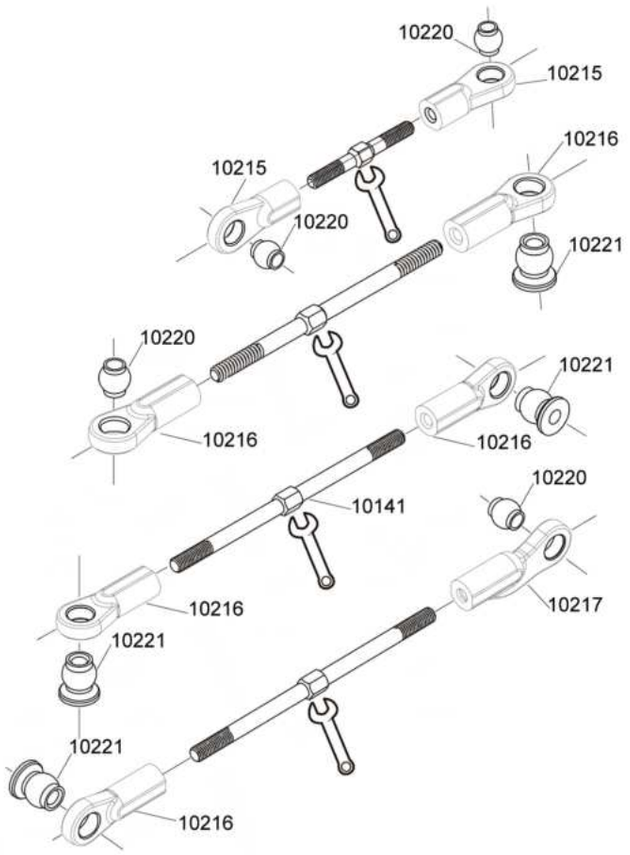

Servo Saver(Bag E)
转向摇臂组合

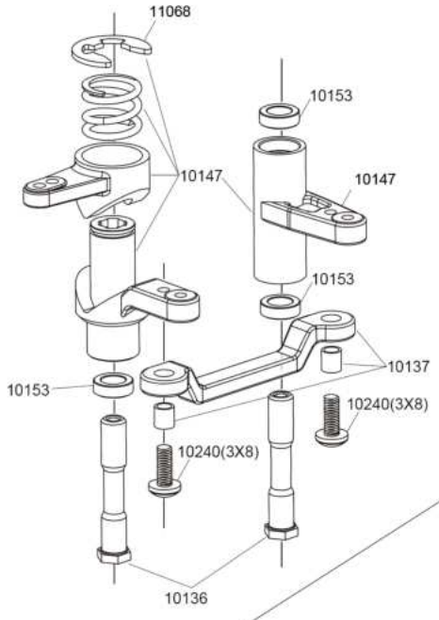

Assemble steering arms.
组装转向拉杆到转向摇臂组上

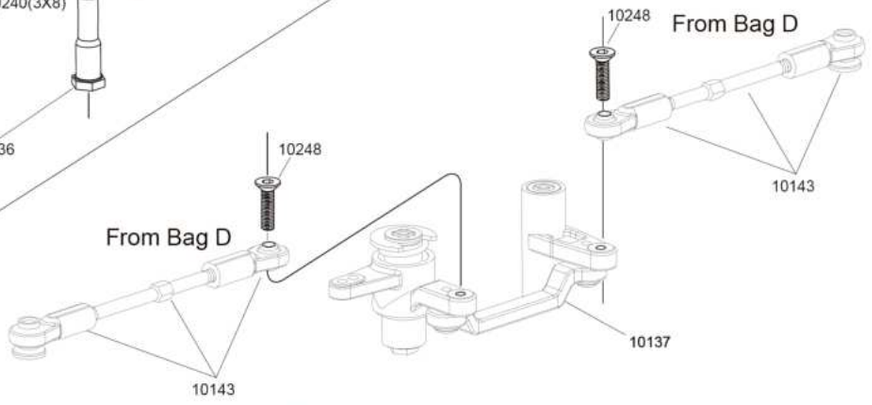

Front Gear Box Assembly(Bag F)
前齿轮箱组装

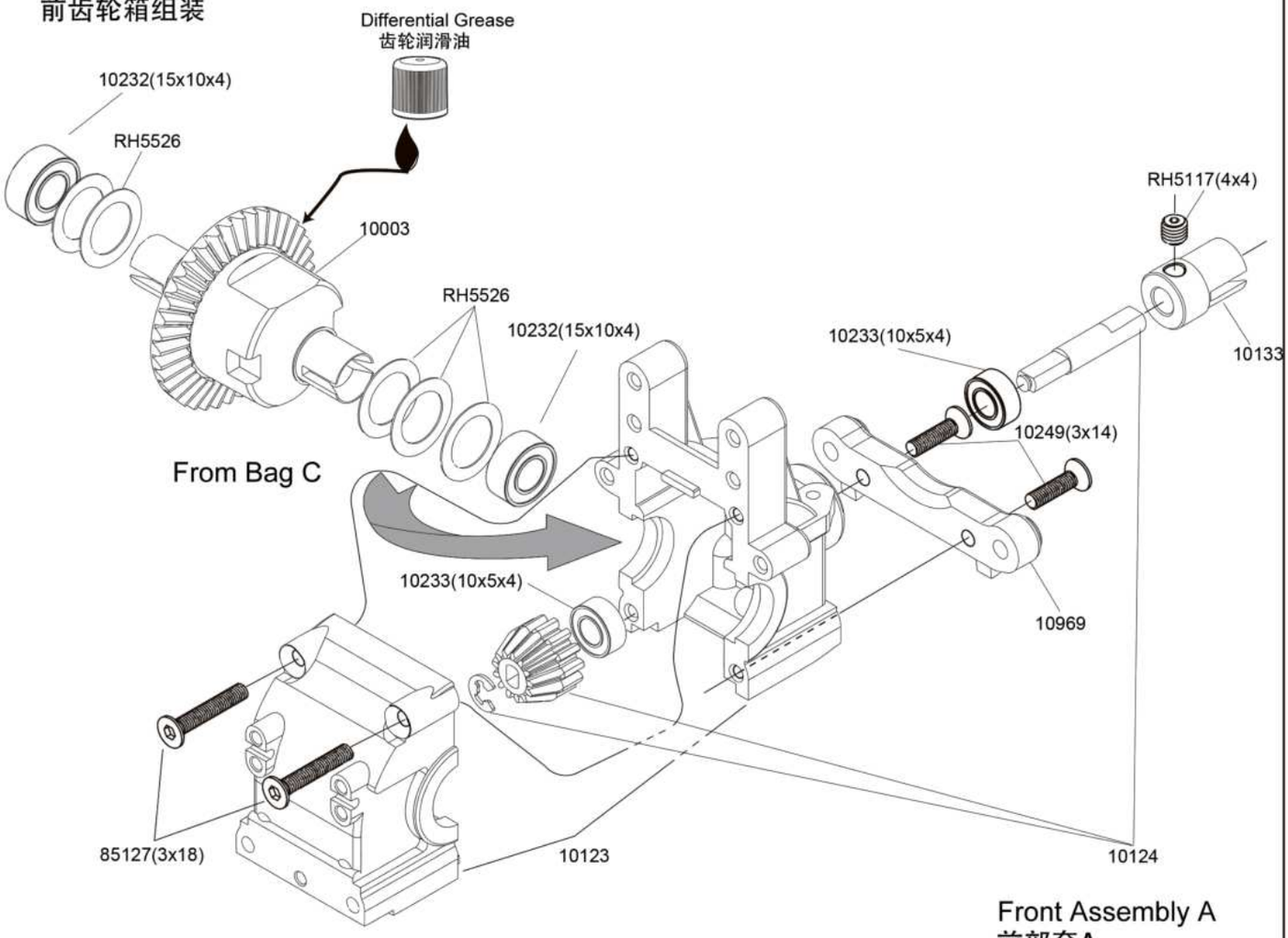

Front Assembly A
前部套A

Front Shock Tower(Bag F)
前避震板组装

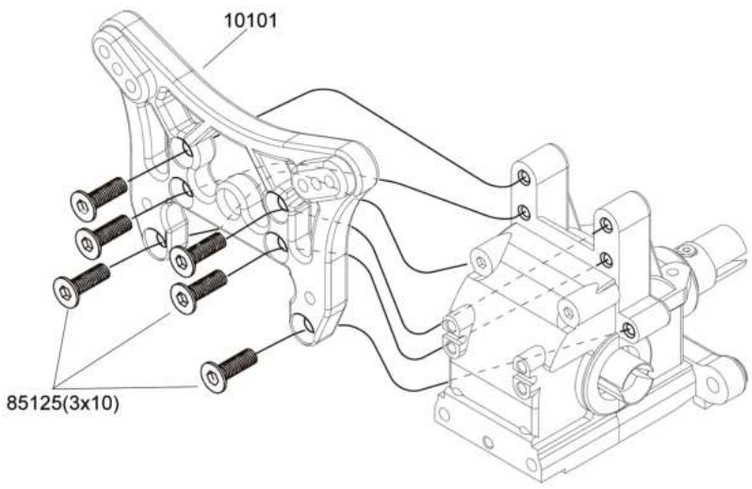

Front Assembly B
前部套B

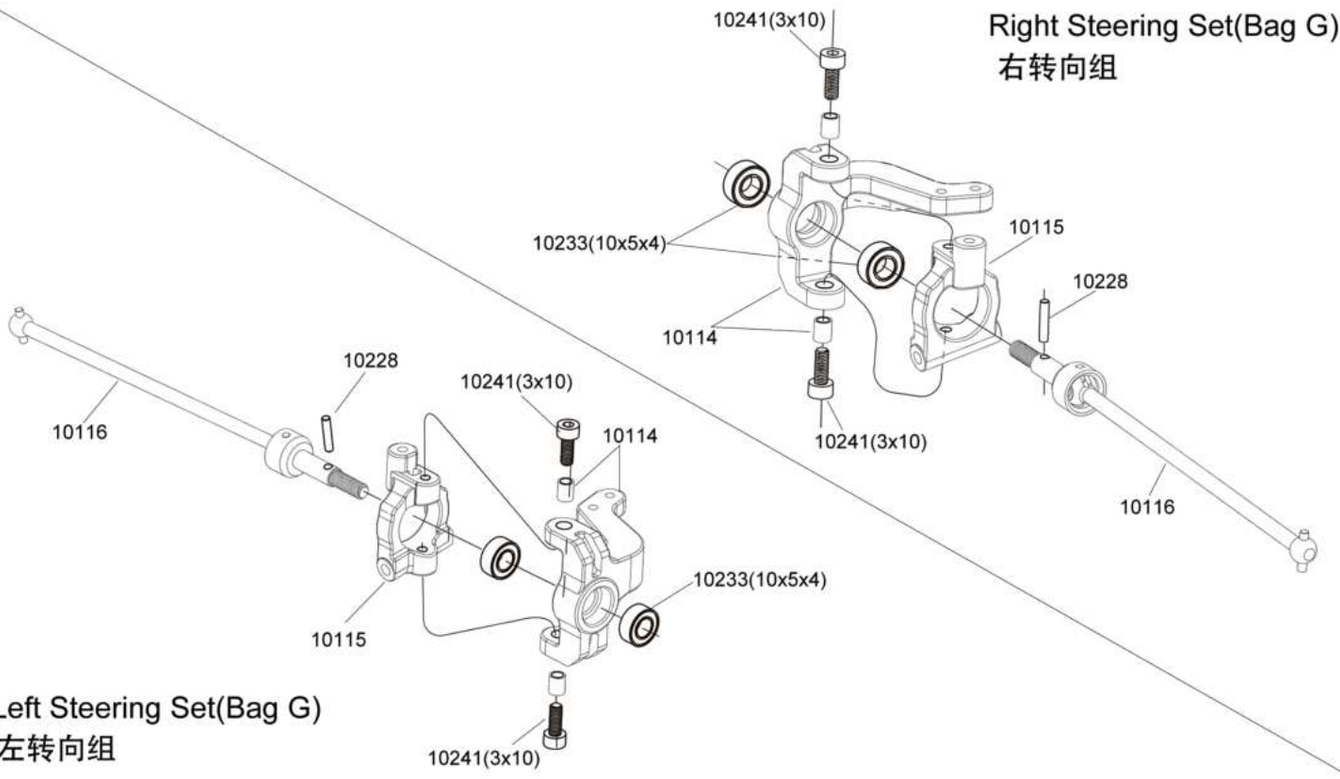

Right Steering Set(Bag G)
右转向组

Left Steering Set(Bag G)
左转向组

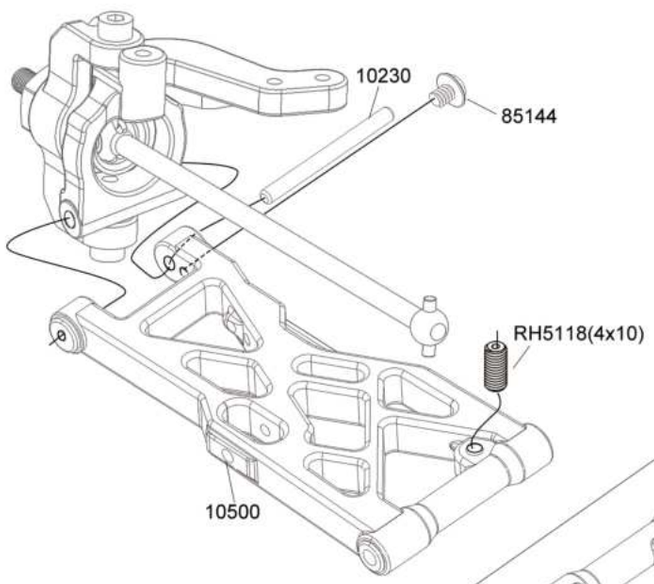

Assemble right steering set with front suspension arm.

右转向组和前下摆臂组合

Front Assembly C
(Bag G)
前部套C

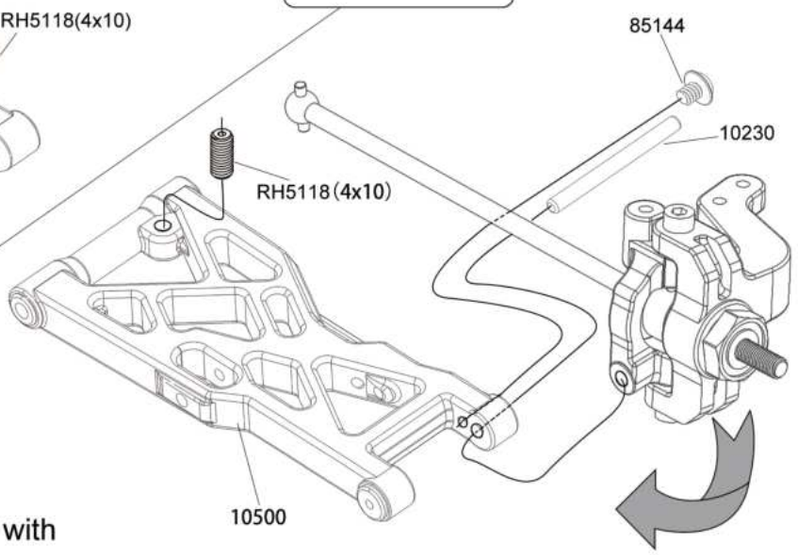

Assemble left steering set with front suspension arm.

左转向组和前下摆臂组合

Front Assembly D(Bag G)
前部套D

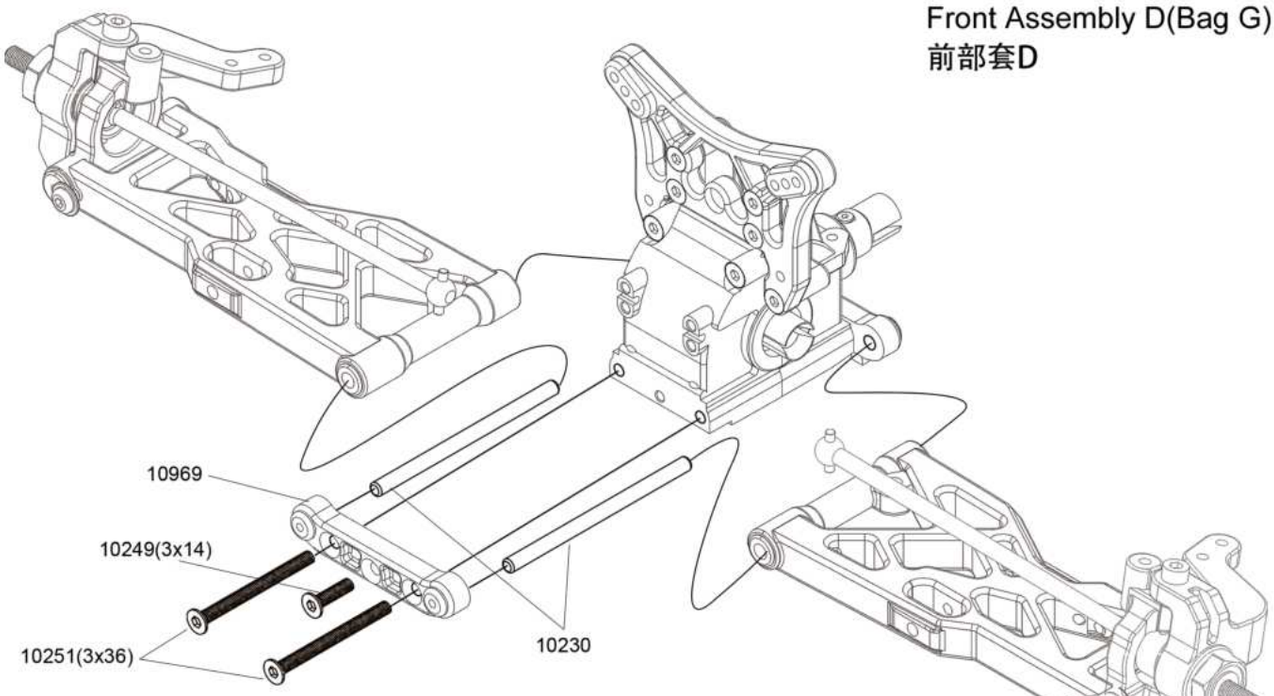

Assemble front susp arm sets to front diff.set.
组装前摆臂组与前齿轮箱组

Front Assembly E
前部套E

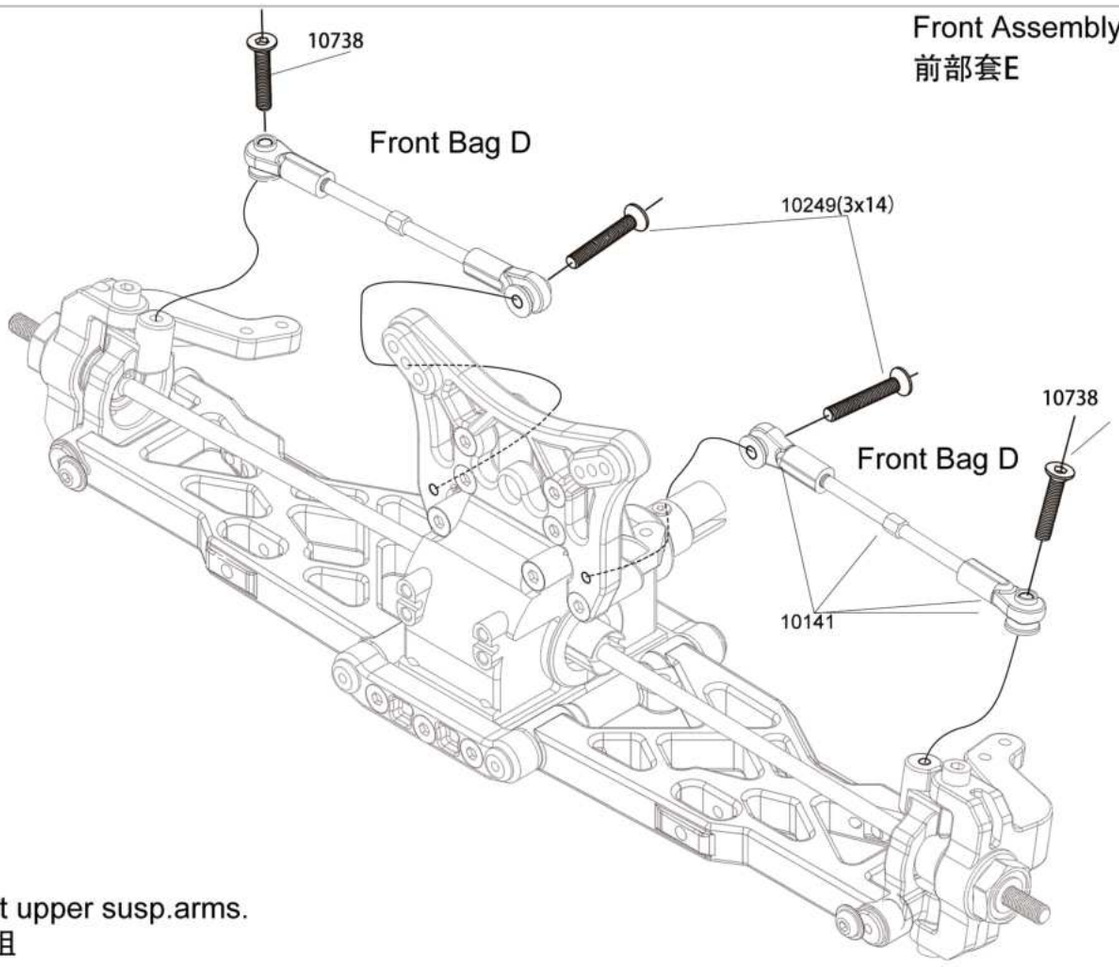

Assemble front upper susp.arms.
组装前上拉杆组

Front Assembly F
前部套F

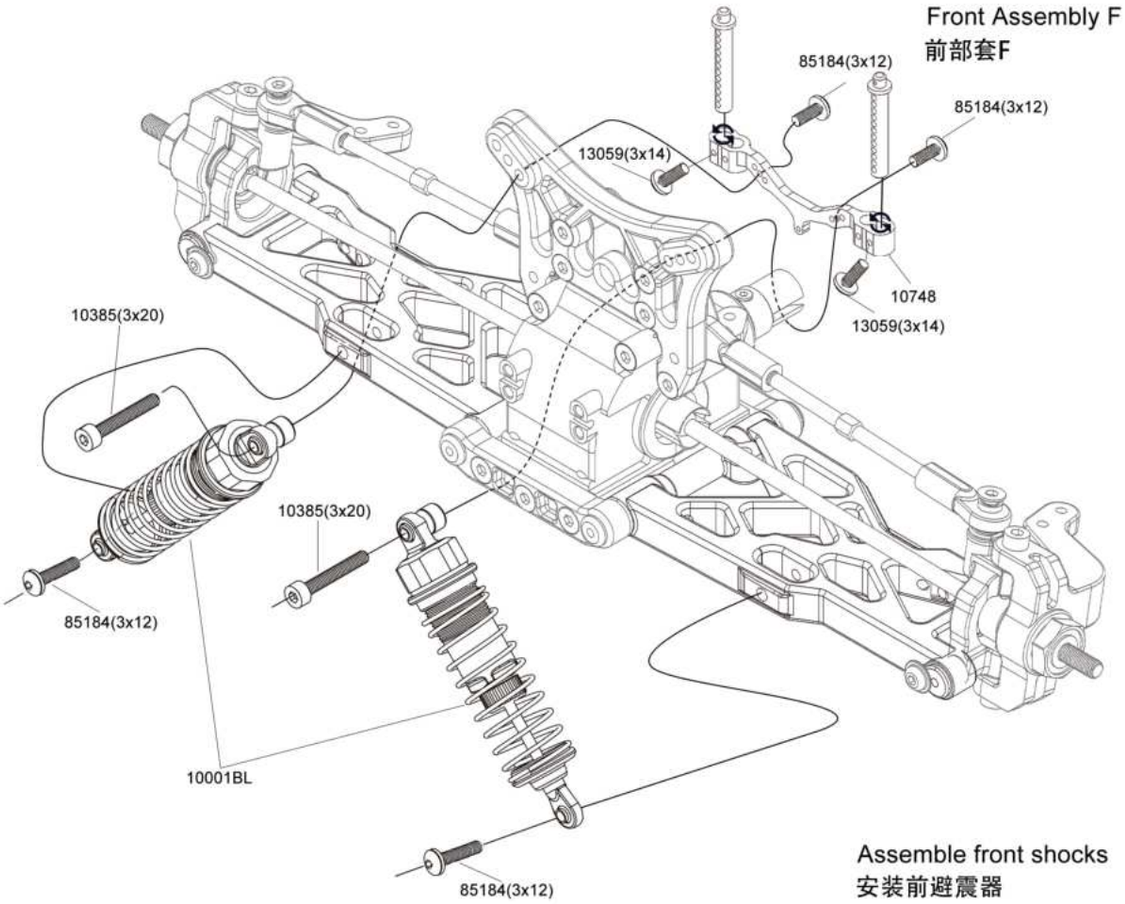

Assemble front shocks
安装前避震器

Two speed gear transmission
双速齿轮箱

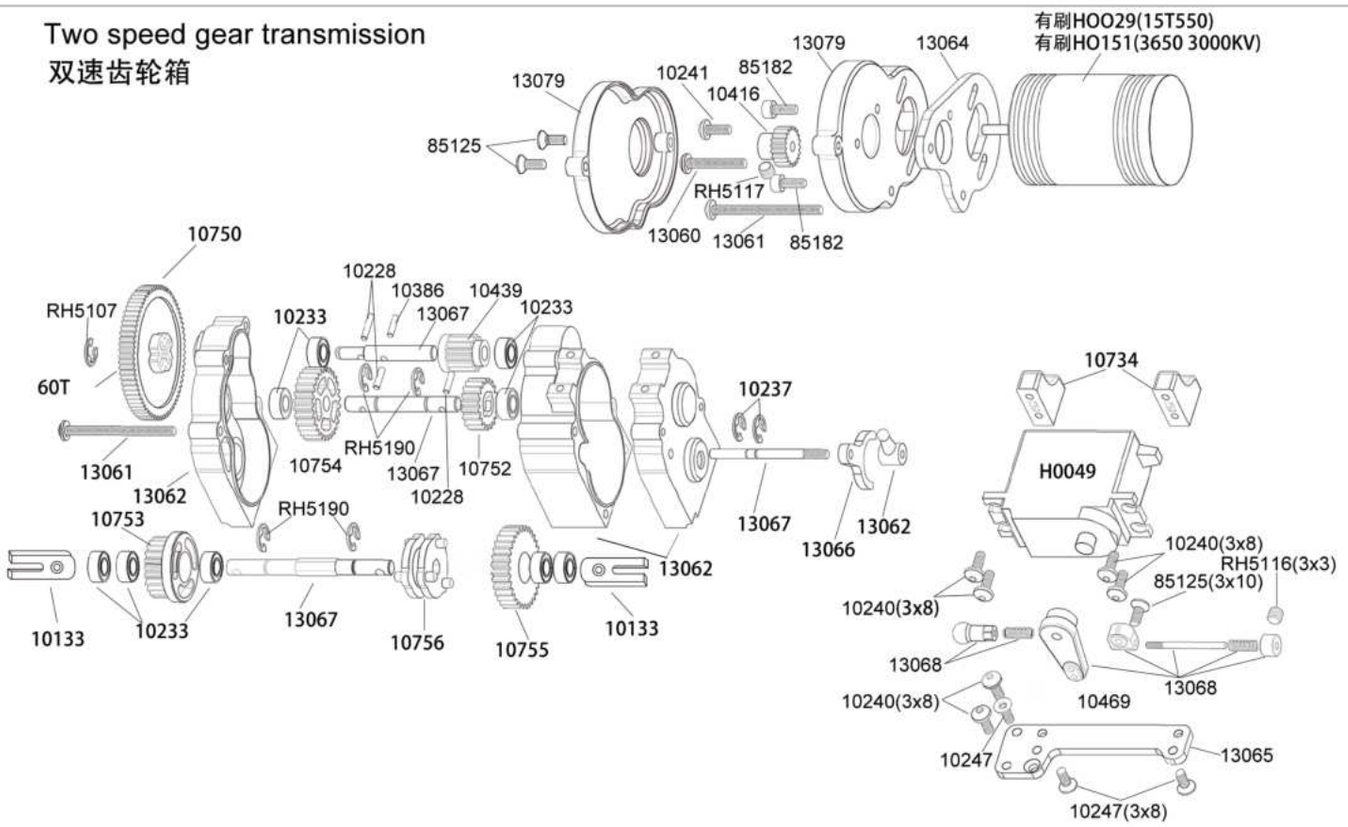

Rear Hub Carrier Set(Bag I)
后轴座组

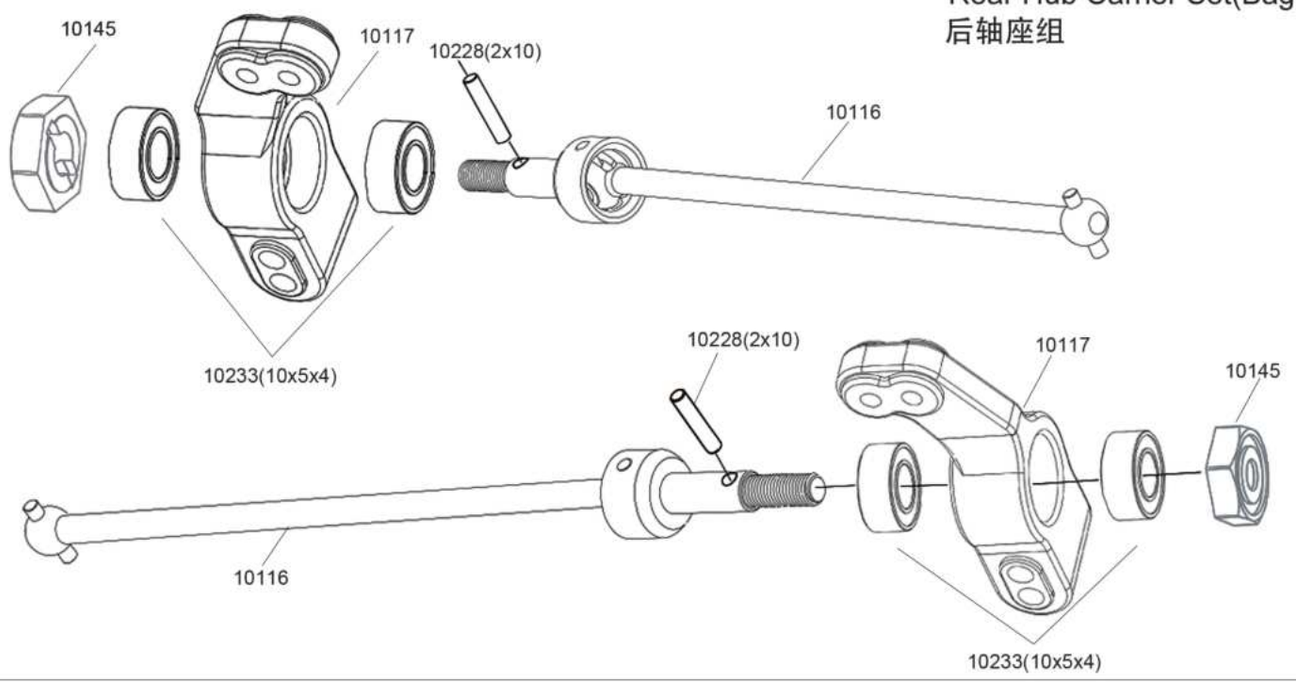

Rear Gera Box Assembly(Bag J)
后齿轮箱组合

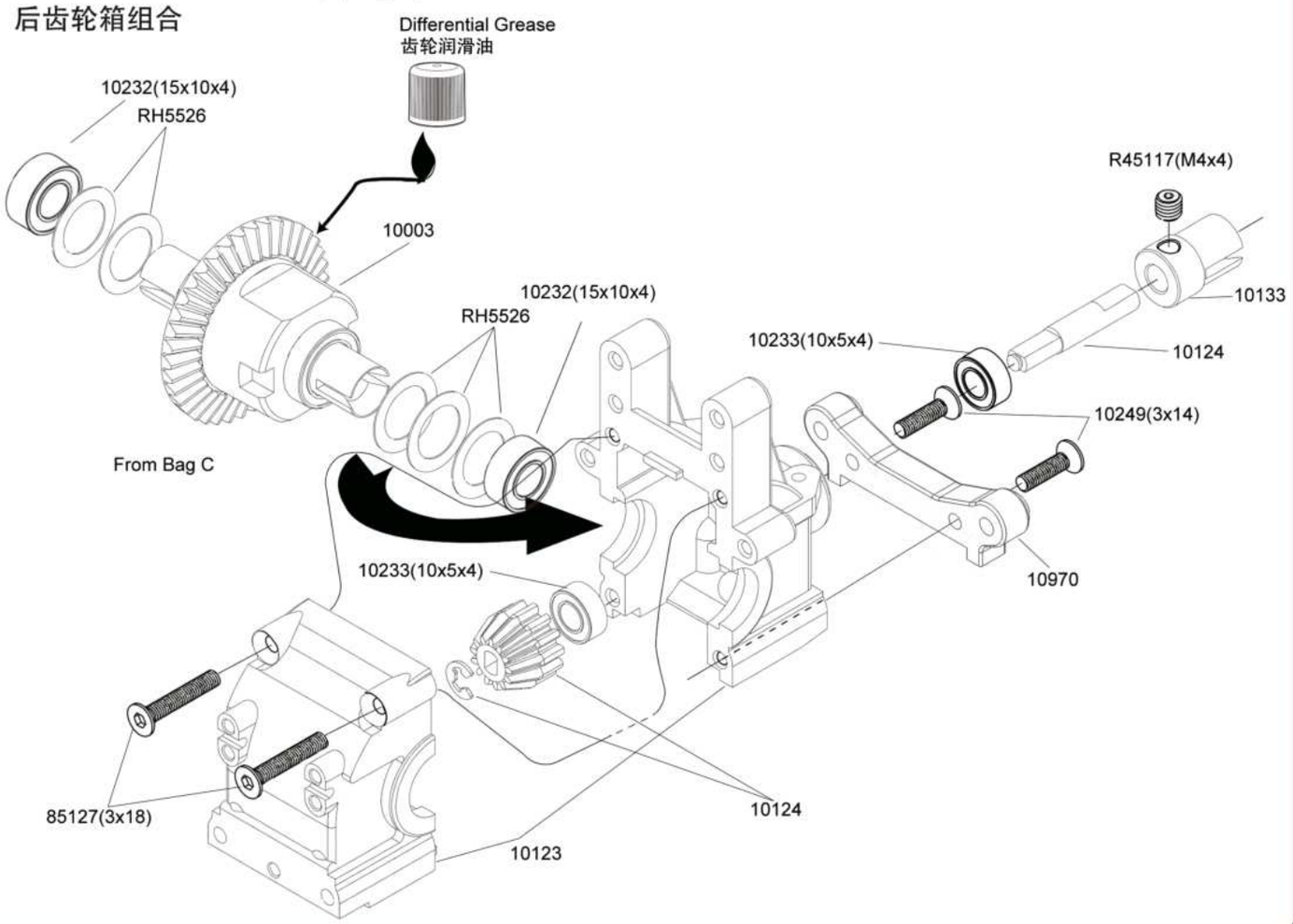

Rear Assembly B(Bag J)
后部套B

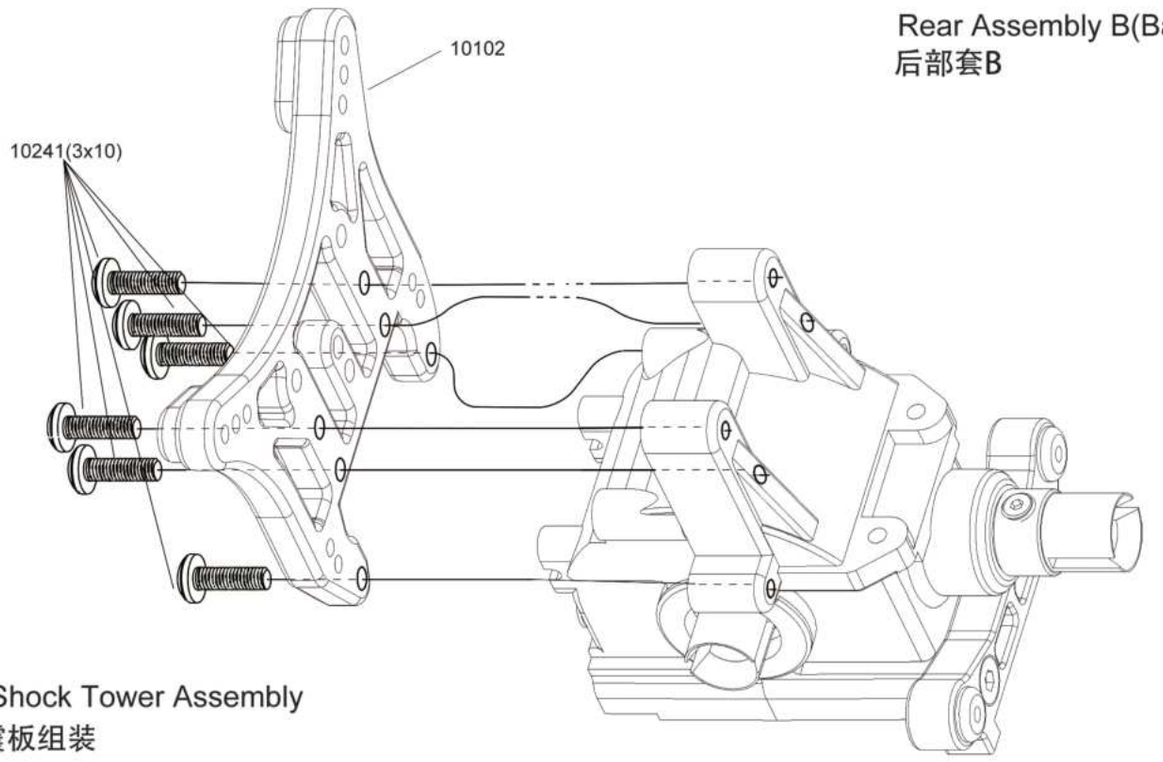

Rear Shock Tower Assembly
后臂震板组装

Bag J

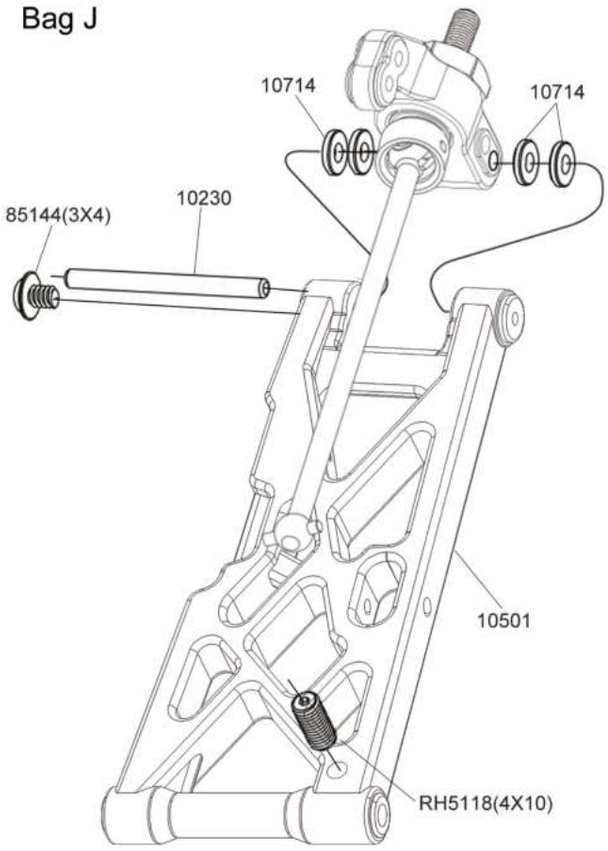

Assemble rear hub carrier set with rear lower susp arm.
组装后轴座组与后下摆臂

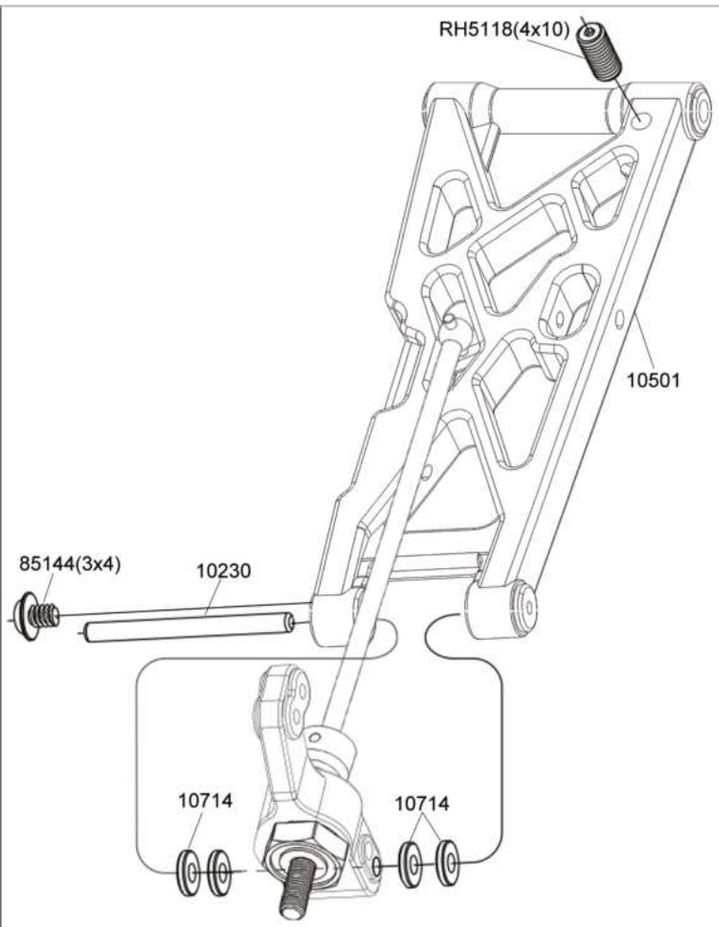

Bag I

后部套C
Rear Assembly C

Assemble rear susp.lower arms
组装后摆臂组与后齿轮箱

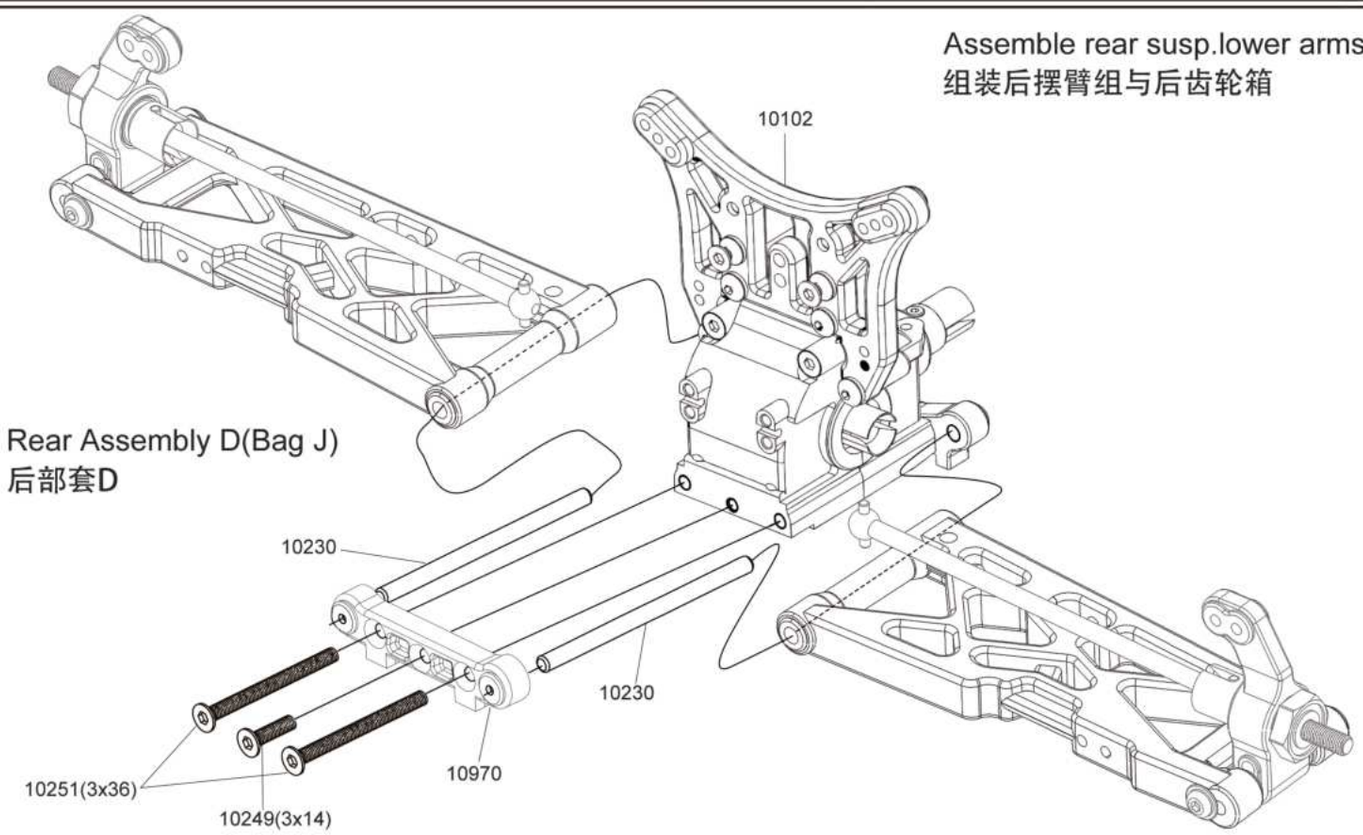

Rear Assembly E(Bag J)
后部套E

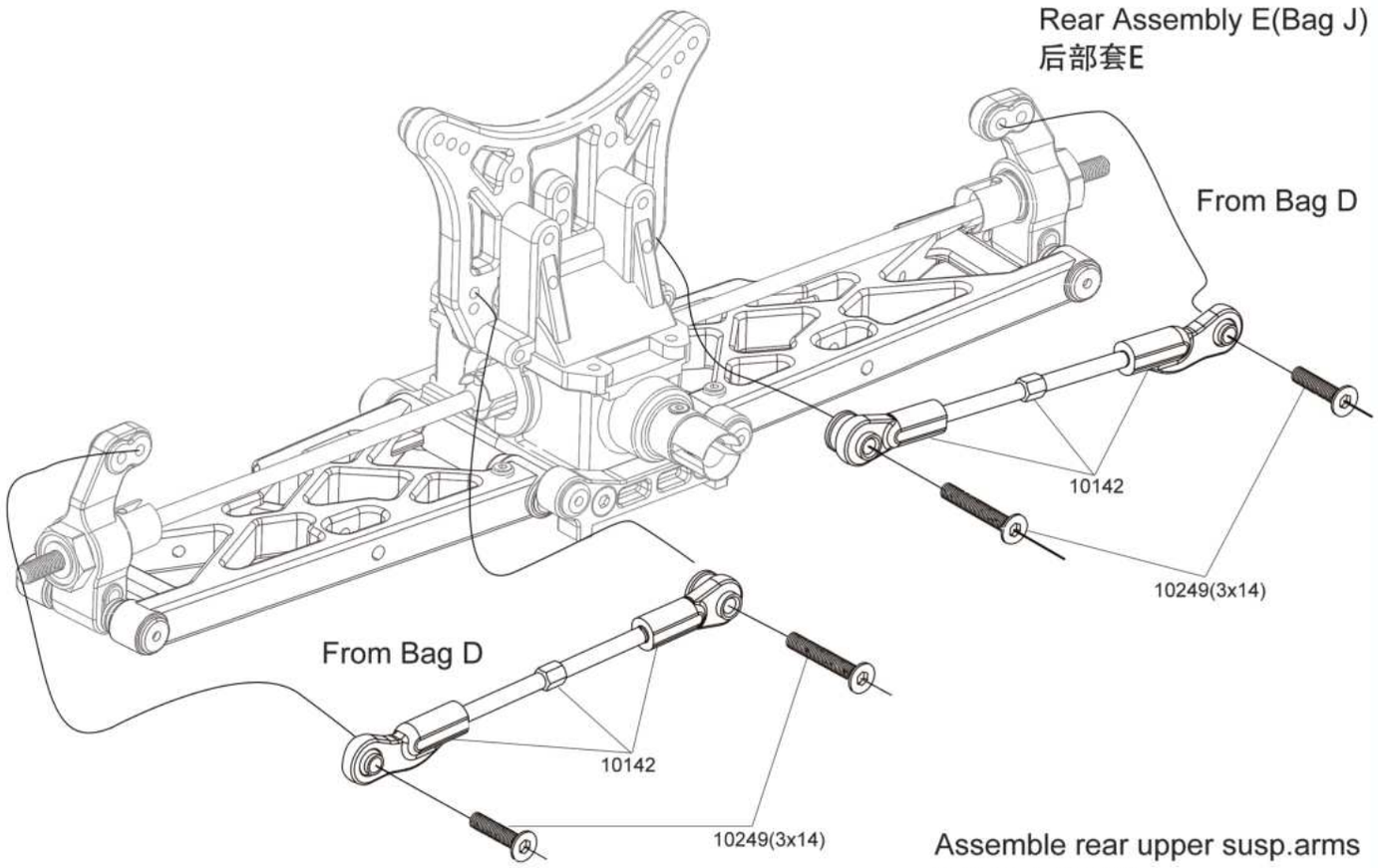

Assemble rear upper susp.arms
组装后上拉杆组

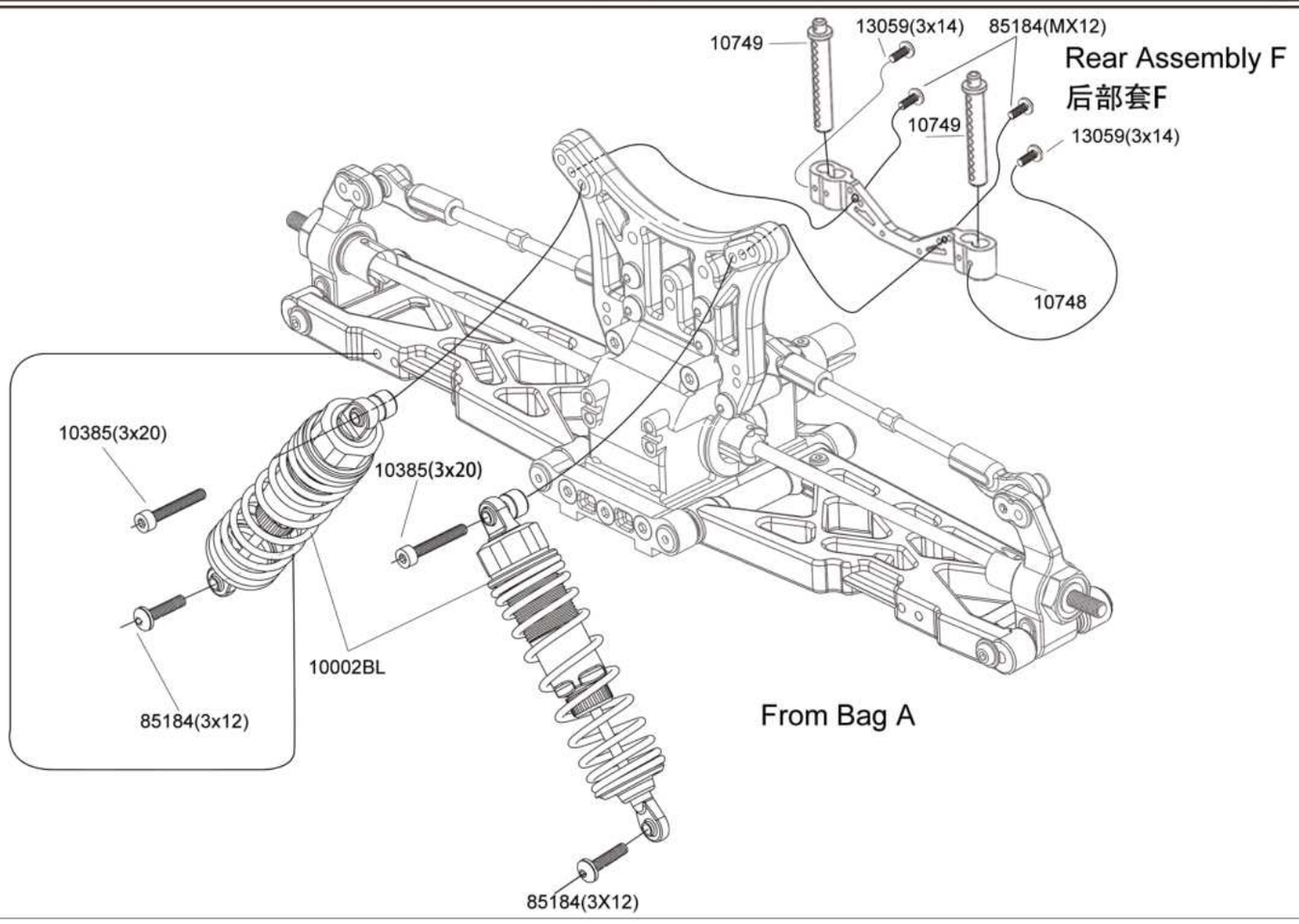
10749
13059(3x14)
85184(MX12)
Rear Assembly F
后部套F
10749
13059(3x14)
10748
10385(3x20)
10385(3x20)
10002BL
85184(3x12)
From Bag A
85184(3X12)

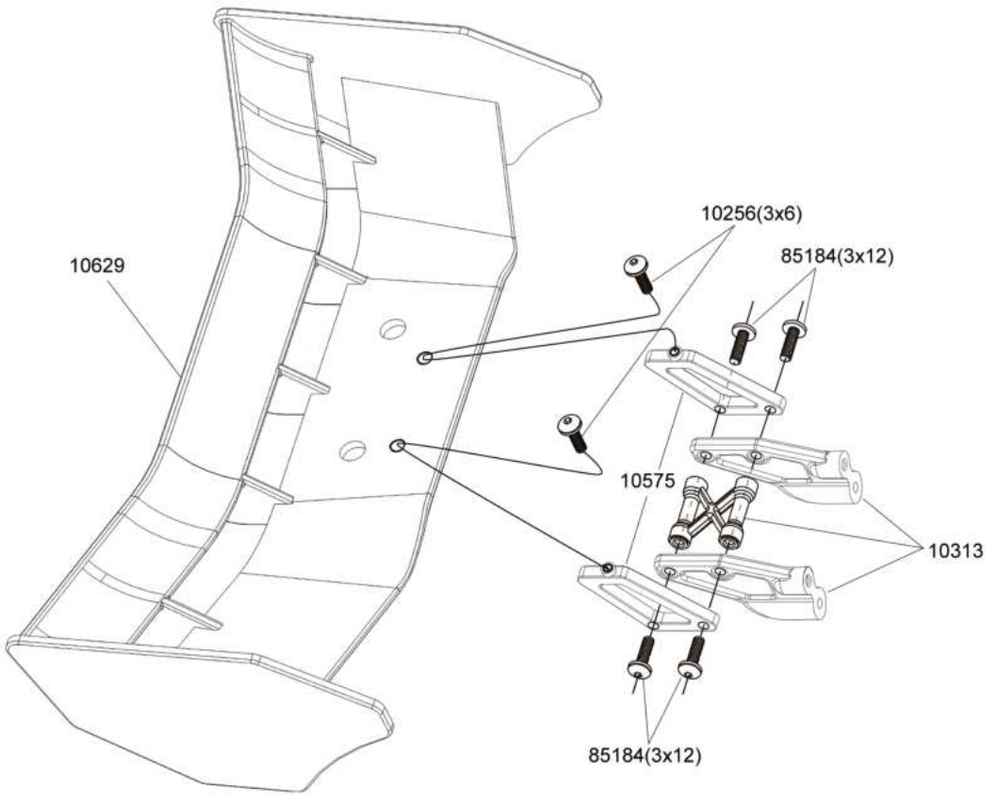
Wing Assembly(Bag K)
尾翼组
10256(3x6)
85184(3x12)
10629
10575
10313
85184(3x12)

Rear Assembly G
后部套G

From Bag K

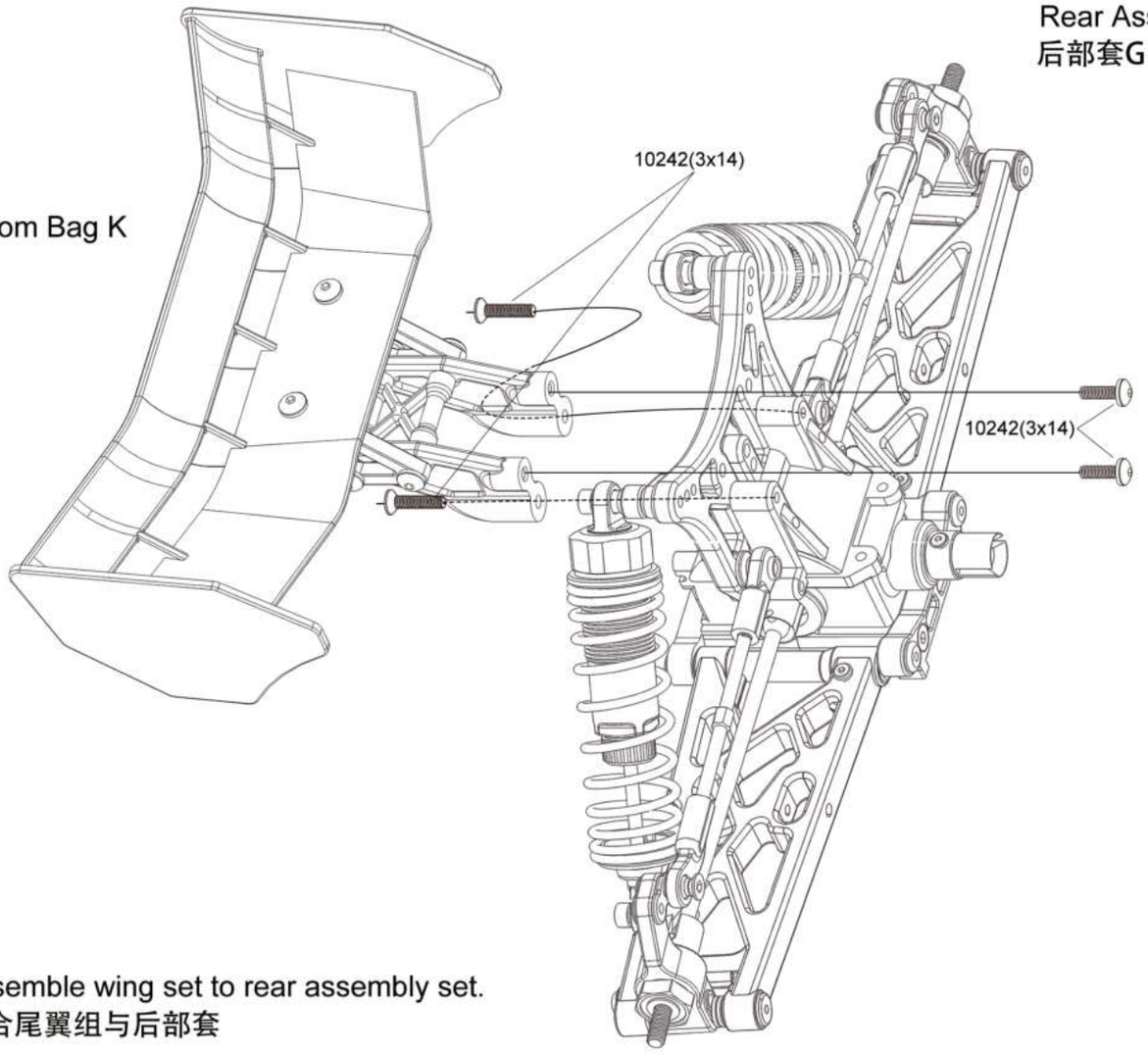

Assemble wing set to rear assembly set.
组合尾翼组与后部套

Receiver(Bag L)
接收机组

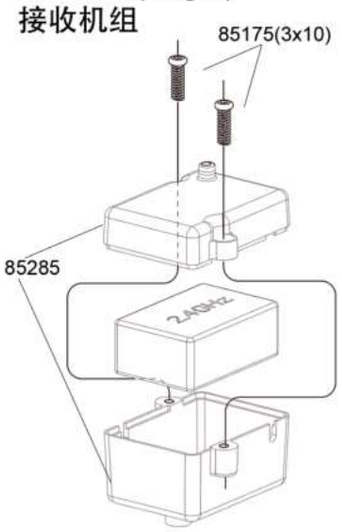

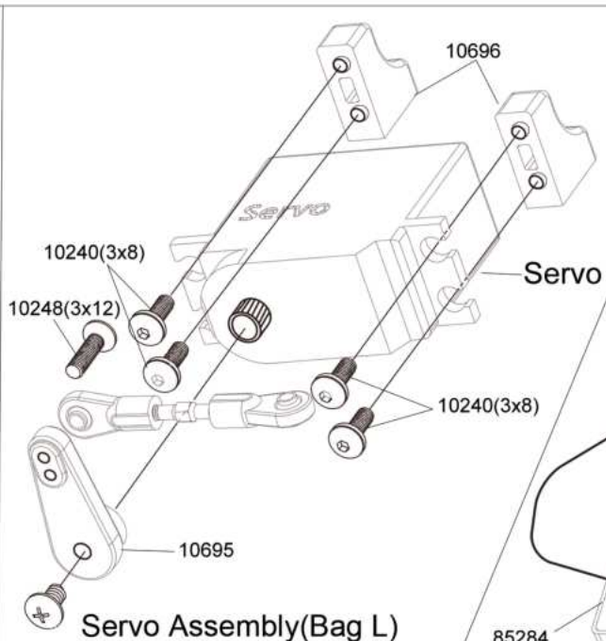

Servo Assembly(Bag L)
伺服器组

Battery(Bag L)
电池组

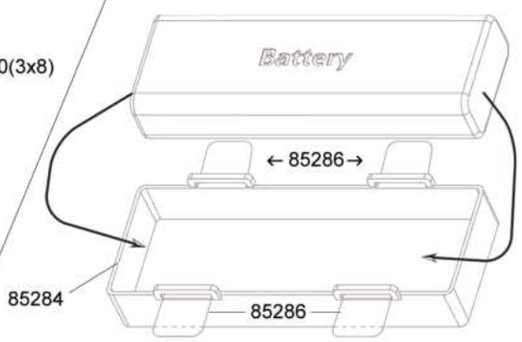

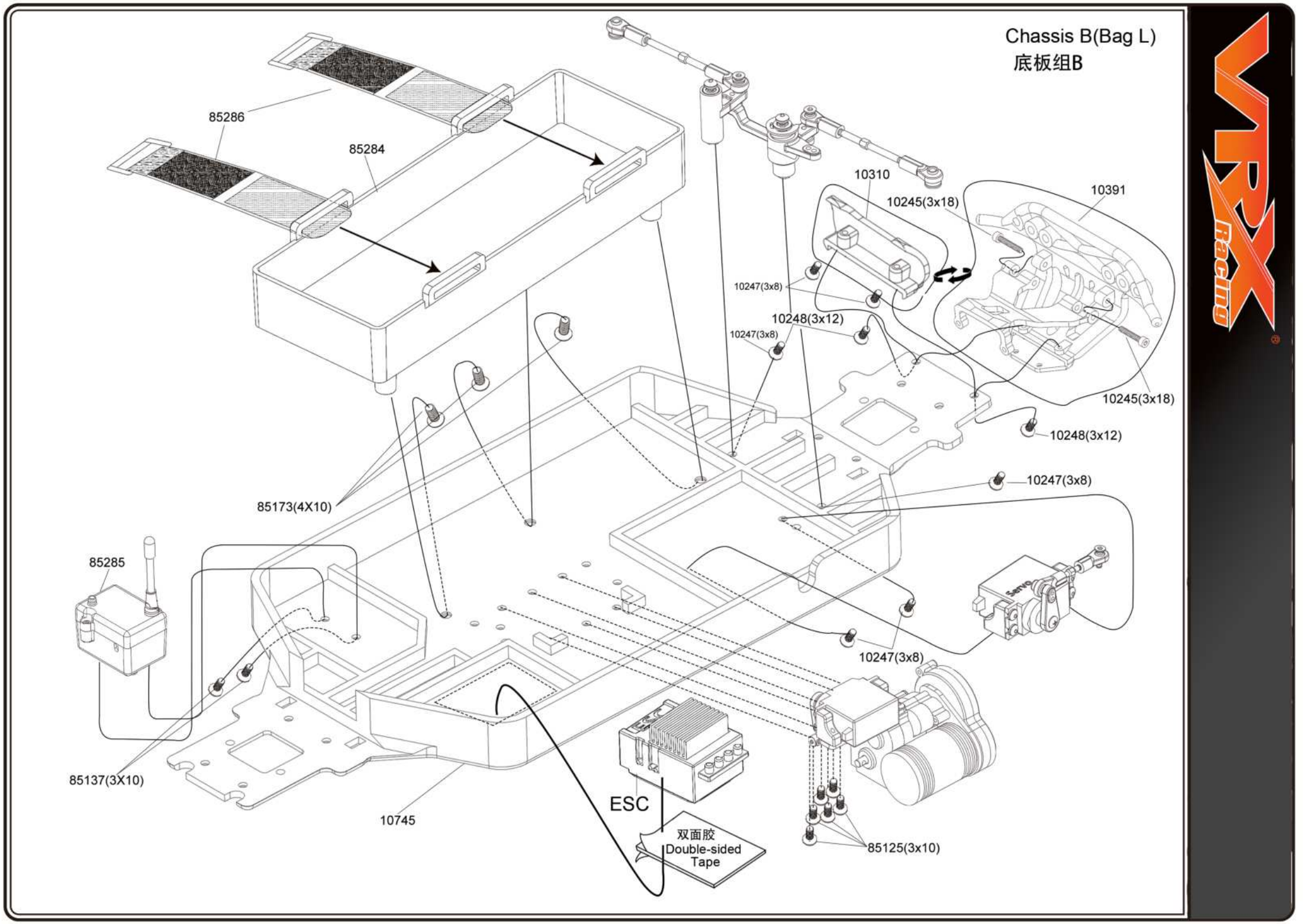
Chassis B(Bag L)
底板组B
85286
85284
10310
10245(3x18)
10391
10247(3x8)
10248(3x12)
10247(3x8)
10245(3x18)
10248(3x12)
85173(4X10)
10247(3x8)
85285
10247(3x8)
85137(3X10)
10745
ESC
双面胶
Double-sided
Tape
85125(3x10)

Chassis Assembly
底盘组装

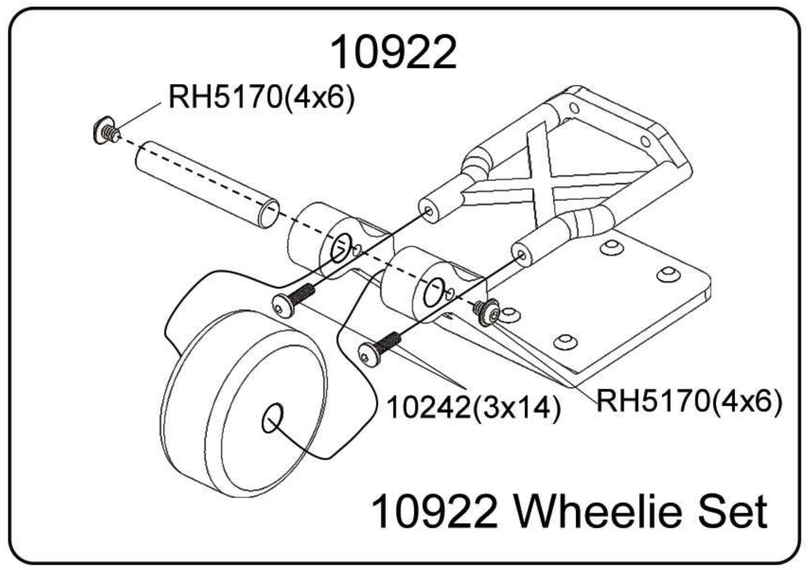

Upper Plate(Bag L)

二楼板组装

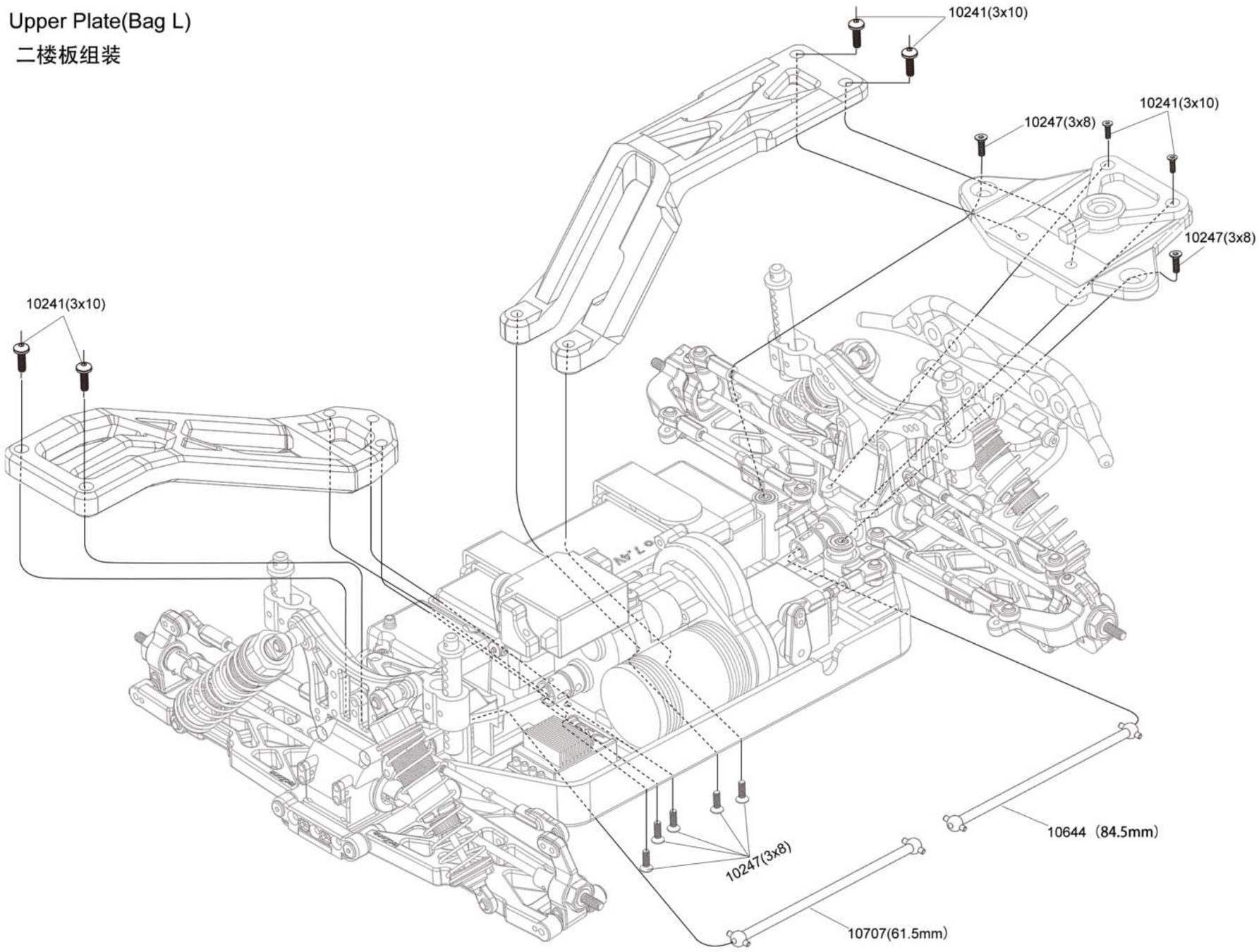

Tyres Assembly(Bag M)

组装轮胎



RH5103(M4)

10723

Body Assembly

组装车壳

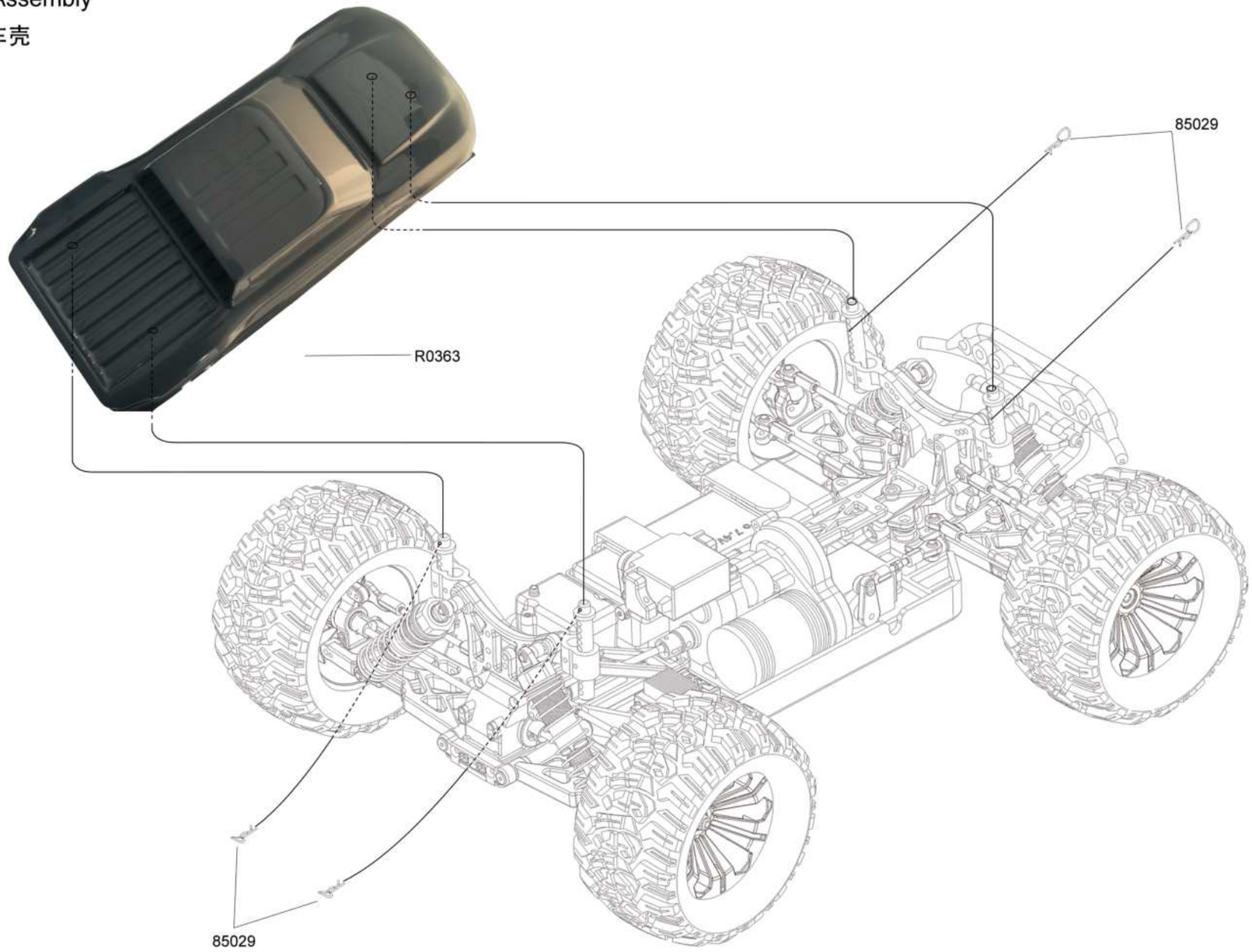

SPARE PARTS LIST

10745-Chassis Plate(EP) 1pc	10500-Front Lower Susp.Arms 2pcs	10501-Rear Lower Susp.Arms 2pcs	10746-Bulk Head Vorne .1 set
			
Mizar-Megrez	Mizar-Megrez	Mizar-Megrez	Mizar-Megrez
10747-Front & Rear Brace	**10749-Body Posts .1 set**	**10748-Body Posts Holder .1 set**	**10750-Spur Gear.1 pc**
			
Mizar-Megrez	Mizar-Megrez	Mizar-Megrez	Mizar-Megrez
10751-Preassembled Tyres.2 sets	**10758-Tyres & Foam Inserts,2 pcs**	**10505-Wheel Complered**	**10753-Two Sped Gear 23T**
			
Mizar	Mizar	Mizar	Mizar-Megrez
10754-Two Sped Gear 28T	**10755-Two Sped Gear 32T**	**10756-Two Sped Shift Holder**	**10752-Two Sped Gear 19T**
			
Mizar-Megrez	Mizar-Megrez	Mizar-Megrez	Mizar-Megrez
13064-Speed Motor Plate	**13062-Gearbox Housing Set. 2 pcs**	**13079-Speed Gear Cover**	**13065-Speed Gear Cover**
			
Mizar-Megrez	Mizar-Megrez	Mizar-Megrez	Mizar-Megrez
13091-Front Bumper	**10416-Pinion Gear 30T**	**10439-Gear 13T**	**13066-2-Dpeed Dhift Plate**
			
Mizar	Mizar-Megrez	Mizar-Megrez	Mizar-Megrez

SPARE PARTS LIST

10101-Front Shock Tower 1 Pc	10102-Rear Shock Tower 1 Pc	10001BL-Front Shocks 2 Pcs	10002BL-Rear Shocks 2 Pcs
 Mizar-Megrez	 Mizar-Megrez	 Mizar-Megrez	 Mizar-Megrez
10103-Front Shock Spring 2pc	10104-Rear Shock Spring 2pc	10105-Front Shock Shaft & Piston Set 2sets	10106-Rear Shock Shaft & Piston Set 2sets
 Mizar-Megrez	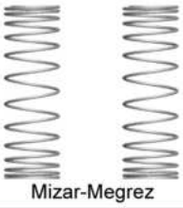 Mizar-Megrez	 Mizar-Megrez	 Mizar-Megrez
10107-Front Shock Body 2pc	10108-Rear Shock body 2pc	10109-Shock Upper Cap 2sets	10110-Shock Lower Caps 2sets
 Mizar-Megrez	 Mizar-Megrez	 Mizar-Megrez	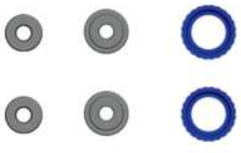 Mizar-Megrez
10111-Shock Lower holder & Adjust Ring 2sets	10114-Steering Knuckle Arm 1set	10115-Uprights 2pc	10116-Front CVD 2pc
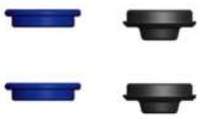 Mizar-Megrez	 Mizar-Megrez	 Mizar-Megrez	 Mizar-Megrez
10117-Rear Hub Carrier 2pc	10123-Gearbox Housing Set 2pcs	10124-Diff.Drive Gear W/Pin 2sets	10125-Diff Case 2pcs
 Mizar-Megrez	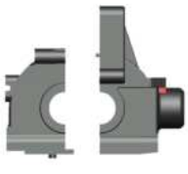 Mizar-Megrez	 13T Mizar-Megrez	 Mizar-Megrez
10126-Diff Drive Spur Gear 2pcs	10127-Diff Drive Gear 2pcs	10128-Diff Bevel Gear S. 4pcs	10129-Diff Bevel Gear B. 4pcs
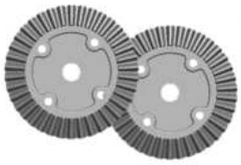 38T Mizar-Megrez	 13T Mizar-Megrez	 10T Mizar-Megrez	 13T Mizar-Megrez

SPARE PARTS LIST

10130-Diff Pin 2pcs	10132-Diff Drive Cup 4pcs	10133-Center Coupler 3pcs	10136-Servo Saver Post 2pcs
 Mizar-Megrez	 Mizar-Megrez	 Mizar-Megrez	 Mizar-Megrez
10137-Steering Ackerman	10141-Front Upper Susp.Arm 2sets	10142-Rear Upper Susp.Arm 2sets	10143-Steering Arm 2sets
 Mizar-Megrez	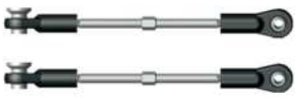 Mizar-Megrez	 Mizar-Megrez	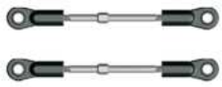 Mizar-Megrez
10144-Servo Linkage 1pc	10146-Antenna Pipe Set 2sets	10147-Servo Saver (EP) 1set	10310-Front Bumper 1pc
 Mizar-Megrez	 Mizar-Megrez	 Mizar-Megrez	 Megrez
10313-Wing Bracket 1set	10214-Shock Ball End 6pcs	10215-Servo Link Ball End 6pcs	10216-Steering Linkage Ball End 6pcs
 Megrez	 Mizar-Megrez	 Mizar-Megrez	 Mizar-Megrez
85034-Body Clip(Medium Size)6pcs	10225-Diff O-ring Seal 6pcs	10226-Shock Seal Cover 4pcs	10228-Pin ∮ 2*10 6pcs
 Mizar-Megrez	 Mizar-Megrez	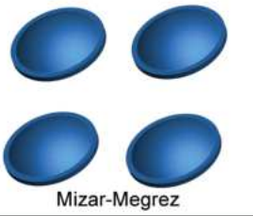 Mizar-Megrez	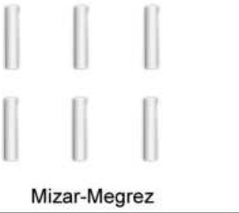 Mizar-Megrez
10230-Hinge Pins(long & short)2sets	10232-Ball Bearing 15*10*4 6pcs	10233-Ball Bearing 10*5*4 6pcs	10003-Diff Gearbox Set 1set
 Mizar-Megrez	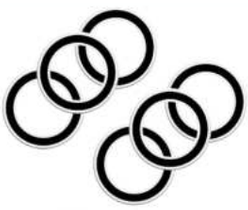 Mizar-Megrez	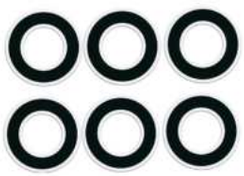 Mizar-Megrez	 Mizar-Megrez

SPARE PARTS LIST

10153-Metal Bushing 8*5*2.5 6pc	11068-C Clip 7.3mm 4pcs	10237-E Clip-2.5mm 6pc	10224-Shock O-ring(Lower) 6pcs
 Mizar-Megrez	 Mizar-Megrez	 Mizar-Megrez	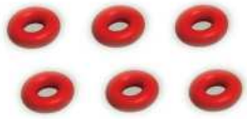 Mizar-Megrez
10220-Ball A 6pcs	10221-Ball B 6pcs	10222-Ball C 6pcs	10238-Round Head Self Tapping Hex Screw 2x10 6pc
 Mizar-Megrez	 Mizar-Megrez	 Mizar-Megrez	 Mizar-Megrez
10240-Button Head Hex Screw 3x8 6pc	10241-Button Head Hex Screw 3x10 6pc	10242-Button Head Hex Screw 3x14 6pc	10247-Flat Head Hex 3x8 6pc
 Mizar-Megrez	 Mizar-Megrez	 Mizar-Megrez	 Mizar-Megrez
10248-Flat Head Hex Screw 3x12 6pc	10249-Flat Head Hex Screw 3x14 6pc	10251-Flat Head Hex Screw 3x36 6pc	10256-Ring Self Tapping Screw 3x6 6pc
 Mizar-Megrez	 Mizar-Megrez	 Mizar-Megrez	 Mizar-Megrez
10385-Cap Head Hex Screw 3x20 6pc	RH5117-Set Screw 4x4 6pc	RH5118-Button Head Hex Screw 4x10 6pc	85125-Flat Head Hex Screw 3x10 8p
 Mizar-Megrez	 Mizar-Megrez	 Mizar-Megrez	 Mizar-Megrez
85127-Flat Head Hex Screw 3x18 3pc	85144-Ring Self Tapping Screw 3x4 4pc	85173-Flat Hex Screw 4x10 6pc	85175-Button Head Hex Tapping Screws 3x10 8pc
 Mizar-Megrez	 Mizar-Megrez	 Mizar-Megrez	 Mizar-Megrez

SPARE PARTS LIST

85182-Cap Head Hex Screw 3x10 6pc	85184-Button Head Hex Screw 3x12 6pc	RH5562-Cap Head Hex Screw 3x8 6pc	85137-Flat Head Self Tapping Screw Set 3x10 12pc
 Mizar-Megrez	 Mizar-Megrez	 Mizar-Megrez	 Mizar-Megrez
85285-RX Case 1set	10734-Servo Mount 2pcs	85284-Battery Case 1pc	85286 - Velco Tape 2pcs
 Mizar-Megrez	 Mizar-Megrez	 Mizar-Megrez	 Mizar-Megrez
RH5102-Nylon Lock Nut M3 6pc	RH5103-Nylon Lock Nut-M4 6pc	10714-Washer 6.9x3.5x1.1 6pcs	10253-1/10 Charger CE 1pc
 Mizar-Megrez	 Mizar-Megrez	 Mizar-Megrez	
H0067-6kg Servo 1pc	H0079-B3 Lipo Charger	H0050-400A ESC 1pc	H0142-HW 60 Brushless ESC
		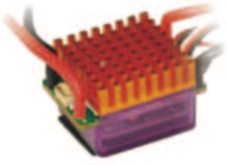	
H0029-550-15T	H0151 3650-3000KV	H0152 — 7.4V 4500Mah Li-ion Battery	85274-7.4V -3250mAH Battey 1pc
			
H0099-Motor Cooling Fan With Heatsink	H0011-3kg Servo 1pc	H0138-MG4 Transmitter 1pc	
			

10970-Rear Susp.Holders (Alloy) 1Set	10969-Front Susp.Holders (Alloy) 1Set	13068-2-Speed Servo Saver Set	10644-84.5x5.8-Central Drive Shaft F. 1pc
			
Mizar-Megrez	Mizar-Megrez	Mizar-Megrez	Mizar-Megrez
10707-61.5x5.8-Central Drive Shaft R. 1pc	**13067-2-Speed Shaft Set**	**10217-Rear Upper Link Ball End 6pcs**	**10629-Rear Wing 1pc**
			
Mizar-Megrez	Mizar-Megrez	Mizar-Megrez	Megrez
10145-Wheel Hub 4pcs	**10575-Wing Bracket 2pcs**	**10720-Rims 2pcs**	**10721-Tyre/Foam Insert 2pcs**
			
Mizar-Megrez	Megrez	Megrez	Megrez
10723-Wheel 2pcs	**13098-2-Speed Gearbox Set W/Motor & Servo**	**13099-2-Speed Gearbox Set W/O Motor & Servo**	**10922-Wheelie Set**
			
Megrez	Mizar-Megrez	Mizar-Megrez	Mizar-Megrez
R0363-Body Shell	**R0364-Body Shell**	**R0365-Body Shell**	
			
Mizar	Mizar	Megrez	

UPGRADE PARTS LIST

10902-Front Shock Plate (Carbon)1Set	10903-Rear Shock Plate (Carbon)1Set	10907BL-Front Shocks(AL) 2pc	10908BL-Rear Shocks(AL) 2pc
 Mizar-Megrez	 Mizar-Megrez	 Mizar-Megrez	 Mizar-Megrez
10909-Front Lower Susp. Arm (AL) 2pc	**10910-Rear Lower Susp. Arm (AL) 2pc**	**10911-Steering Ackerman (AL) 1pc**	**10912-Front Susp. Holders (AL) 1set**
 Mizar-Megrez	 Mizar-Megrez	 Mizar-Megrez	 Mizar-Megrez
10914-Rear Susp. Holders (AL) 1set	**10915-Rear Hub Carrier (AL) 2pc**	**10917-Steering Knuckle Arm (AL) 2set**	**10918-Wheel Hub (AL) 4pcs**
 Mizar-Megrez	 Mizar-Megrez	 Mizar-Megrez	 Mizar-Megrez
10923-Alum Steering Arm 2pc	**10924-Alum Knuckle Arm 2pc**	**10210-Sway Bar 2Sets**	**11089-Aluminum Front & Rear Brace**
 Mizar-Megrez	 Mizar-Megrez	 Mizar-Megrez	 Mizar-Megrez
11090-Aluminum Bulk Head Vorne .1 set	**11091-Aluminum Chassis Plate(EP) 1pc**		
 Mizar-Megrez	 Mizar-Megrez		

MIZAR



WWW.RIVERHOBBY.COM

VRX Racing